Maintenance
Polo 1995 ➤
Edition 03.2018

Protected by copyright. Copying for private or commercial purposes, in part or in whole, is not permitted unless authorised by Volkswagen AG. Volkswagen AG does not guarantee or accept any liability with respect to the correctness of information in this document. Copyright by Volkswagen AG.

satelettronica

Maintenance

Heading

1. Engine list
2. Service work
3. General information
4. Descriptions of work:
5. Exhaust emissions test
6. Glossary

Protected by copyright. Copying for private or commercial purposes, in part or in whole, is not permitted unless authorised by Volkswagen AG. Volkswagen AG does not guarantee or accept any liability with respect to the correctness of information in this document. Copyright by Volkswagen AG.

satelettronica

Technical information should always be available to the foremen and mechanics, because their careful and constant adherence to the instructions is essential to ensure vehicle road-worthiness and safety. In addition, the normal basic safety precautions for working on motor vehicles must, as a matter of course, be observed.

All rights reserved.
No reproduction without prior agreement from publisher.

Copyright © 2018 Volkswagen AG, Wolfsburg

00450215020

Contents

1	**Engine list**	**1**
2	**Service work**	**6**
2.1	Service tables	6
2.2	Delivery inspection	8
2.3	Oil change service	9
2.4	Inspection service	11
3	**General information**	**17**
3.1	Lifting the vehicle	17
3.2	Sticker	18
3.3	Connecting vehicle diagnostic tester	20
3.4	Vehicle identification number	22
3.5	Vehicle data sticker	22
3.6	Countries where diesel has a high sulphur content	23
3.7	Engine code and engine number	23
3.8	RME fuel (biodiesel)	23
3.9	Type plate	24
4	**Descriptions of work:**	**25**
4.1	Swivel joints: inspecting	26
4.2	Automatic gearbox: checking ATF level, topping up if necessary	26
4.3	Battery: checking	26
4.4	Battery: checking battery terminal clamps for secure seating	27
4.5	Tyres: checking condition, wear pattern, inflation pressure, tread depth	28
4.6	Brake system: inspecting for leaks and damage	32
4.7	Front and rear brake pads/linings: checking thickness	32
4.8	Brake system: changing brake fluid	34
4.9	Brake fluid level: checking	37
4.10	Electric windows: initialising (activation)	38
4.11	Vehicle system test: carrying out test	38
4.12	Folding fabric sunroof: cleaning and lubricating guide rails	39
4.13	Boots: inspecting	40
4.14	Checking first aid box expiry date	40
4.15	Poly V-belt: checking condition, tensioning if necessary	40
4.16	Fuel filter: renewing	42
4.17	Fuel filter: draining water (diesel engine)	44
4.18	Cooling system: checking frost protection and coolant level	46
4.19	Idling speed: checking and adjusting if necessary	49
4.20	Air filter: cleaning housing and renewing filter element	49
4.21	Engine cover panel -top-: removing and installing	57
4.22	Engine cover panel, -bottom- (noise insulation): removing and installing	58
4.23	Engine oil level: checking	58
4.24	Engine oil: draining or extracting and replenishing; renewing oil filter	59
4.25	Engine and components in engine compartment: inspecting for leaks and damage (from above and below)	64
4.26	Carrying out road test	64
4.27	Wheel bolts: tightening to specified torque	65
4.28	Radio and radio-navigation system: sticking serial number and code number onto unit card	67
4.29	Radio/radio-navigation system: activating anti-theft coding	67
4.30	Manual gearbox/final drive: checking oil level, topping-up oil if necessary	68
4.31	Headlight adjustment: checking, adjusting if necessary	69
4.32	Sunroof: checking function, cleaning and greasing guide rails	76
4.33	Window wash/wipe system and headlight washer system: checking function	77
4.34	Wiper blades: checking park position and setting angle	82
4.35	Power assisted steering: checking fluid level	84

Protected by copyright. Copyright by Volkswagen AG. Volkswagen AG does not guarantee or accept any liability with respect to the correctness of information in this document. Copying for private or commercial purposes, in part or in whole, is not permitted unless authorised by Volkswagen AG.
satelettronica

4.36 Service interval display: resetting . . . 86
4.37 Track rod ends: checking clearance, firm seating and boots . . . 101
4.38 Dust and pollen filter: renewing filter element . . . 101
4.39 Door arrester: lubricating . . . 102
4.40 Clock: setting to correct time . . . 103
4.41 Underbody protection: visual check for damage . . . 104
4.42 Toothed belt: checking for wear . . . 104
4.43 Camshaft drive toothed belt and tensioning roller: renewing, PD diesel engine . . . 106
4.44 Toothed belt: renewing . . . 106
4.45 Toothed belt: checking condition and tensioning, tensioning toothed belt if necessary . . . 107
4.46 Spark plugs: renewing . . . 108
4.47 Camshaft drive toothed belt: checking (4-cylinder petrol engine) . . . 112
4.48 Driver and front passenger airbags: visual check of airbag units . . . 113

5 Exhaust emissions test . . . 115
5.1 Exhaust emissions test for petrol engines without OBD . . . 115
5.2 Exhaust emissions test for petrol engines with OBD . . . 134
5.3 Exhaust emissions test for diesel engines without OBD . . . 137

6 Glossary . . . 153

Protected by copyright. Copying for private or commercial purposes, in part or in whole, is not permitted unless authorised by Volkswagen AG. Volkswagen AG does not guarantee or accept any liability with respect to the correctness of information in this document. Copyright by Volkswagen AG.

satelettronica

1 Engine list

(VIGG001139; Edition 03.2018)

- Petrol engines ⇒ page 1
- Diesel engines ⇒ page 5

Petrol engines

Engines	→	Petrol engine	Petrol engine	Petrol engine
Displacement	l	1.3	1.6	1.6
Codes		**ADX**	**AEA**	**AEE**
Manufactured	from	09.94	09.94	08.95
	to	07.95	07.95	08.95
No. of cylinders/valves per cylinder		4/2	4/2	4/2
Power	kW at rpm	40/5200	55/5200	55/4800
Torque	Nm at rpm	100/2800…3400	128/2800…3400	135/2800…3600
Bore	∅ mm	76.5	76.5	75.0
Stroke	mm	70.5	86.9	86.9
Compression ratio		10.0	9.8	9.8
Injection/ignition		Mono-Motronic	Mono-Motronic	1AV
RON	unleaded, at least	95 1)	95 1)	95 1)
Market		RoW	RoW	RoW
Onboard diagnosis		---	---	---

1) Under exceptional circumstances petrol unleaded, at least 91 RON, but with reduced output.

Engines	→	Petrol engine	Petrol engine	Petrol engine
Displacement	l	1,0	1.0	1.4
Codes		**AER**	**AEV**	**AEX**
Manufactured	from	09.94	09.94	08.95
	to	2000	07.96	2000
No. of cylinders/valves per cylinder		4/2	4/2	4/2
Power	kW at rpm	37/5000	33/5200	44/4700 2)
Torque	Nm at rpm	86/3000…3600	76/2800…3200	116/2800…3200 2)
Bore	∅ mm	67.1	75.0	76.5
Stroke	mm	70.6	59.0	75.6
Compression ratio		10.5	10.0	10.2
Injection/ignition		Motronic 9.0	Mono-Motronic1.2.3R	Motronic MP9.0
RON	unleaded, at least	95 1)	95 1)	95 1)
Market		RoW	RoW	RoW
Onboard diagnosis		---	---	---

1) Under exceptional circumstances petrol unleaded, at least 91 RON, but with reduced output.

Protected by copyright. Copying for private or commercial purposes, in part or in whole, is not permitted unless authorised by Volkswagen AG. Volkswagen AG does not guarantee or accept any liability with respect to the correctness of information in this document. Copyright by Volkswagen AG.
satelettronica

2) Austria: reduced output, performance: 40 kW and specified torque: 116 Nm at 3000 rpm

Engines →	Petrol engine	Petrol engine	Petrol engine
Displacement l	1,4	1.4	1.4
Codes	**AFH**	**AFK**	**AHW**
Manufactured from	05.96	10.99	10.99
to	2000	2002	2002
No. of cylinders/valves per cylinder	4/4	4/4 RRF 3)	4/4 RRF 3)
Power kW at rpm	74/6000	74/6000	55/5000
Torque Nm at rpm	128/4400	128/4500	126/3500
Bore ∅ mm	76.5	76.5	76.5
Stroke mm	75.6	75.6	75.6
Compression ratio	10.5	10.5	10.5
Injection/ignition	1AV	Magneti Marelli 4 AV	Magneti Marelli 4 AV
RON unleaded, at least	98 2)	95 1)	95 1)
Market	RoW	RoW	RoW
Onboard diagnosis	---	---	---

1) Under exceptional circumstances petrol unleaded, at least 91 RON, but with reduced output.

2) Under exceptional circumstances super unleaded, at least 95 RON, but with reduced output.

3) Abbreviation for roller rocker finger

Engines →	Petrol engine	Petrol engine	Petrol engine
Displacement l	1,6	1.4	1.4
Codes	**AJV**	**AKK**	**AKP**
Manufactured from	03.98	10.99	10.99
to	2000	2002	2002
No. of cylinders/valves per cylinder	4/4	4/2 RRF 3)	4/2 RRF 3)
Power kW at rpm	88/6200	44/4700	40/4700
Torque Nm at rpm	150/4500	116/3000	116/3000
Bore ∅ mm	76.5	76.5	76.5
Stroke mm	86.9	75.6	75.6
Compression ratio	10.5	10.4	10.4
Injection/ignition	Magneti Marelli 4 AV	Motronic ME 7.5.10	Motronic ME 7.5.10
RON unleaded, at least	98 2)	95 1) 4)	95 1)
Market	RoW	RoW	Austria
Onboard diagnosis	---	---	---

1) Under exceptional circumstances petrol unleaded, at least 91 RON, but with reduced output.

Protected by copyright. Copying for private or commercial purposes, in part or in whole, is not permitted unless authorised by Volkswagen AG. Volkswagen AG does not guarantee or accept any liability with respect to the correctness of information in this document. Copyright by Volkswagen AG.
satelettronica

2) Under exceptional circumstances super unleaded, at least 95 RON, but with reduced output.

3) Abbreviation for roller rocker finger

4) leaded fuel permitted

Engines →		Petrol engine	Petrol engine	Petrol engine
Displacement	l	1,4	1.0	1.0
Codes		**AKV**	**ALD**	**ALL**
Manufactured	from	05.97	10.99	09.97
	to	2000	2002	2000
No. of cylinders/valves per cylinder		4/2	4/2 RRF 2)	4/2
Power	kW at rpm	44/4700	37/5000	37/5000
Torque	Nm at rpm	116/2800…3200	86/3000…3600	86/3000…3600
Bore	∅ mm	76.5	67.1	67.1
Stroke	mm	75.6	70.6	70.6
Compression ratio		10.2	10.7	10.5
Injection/ignition		MPI	Motronic ME 7.5.10	MPI
RON	unleaded, at least	95 1)	95 1)	95 1)
Market		RoW	RoW	RoW
Onboard diagnosis		---	---	---

1) Under exceptional circumstances petrol unleaded, at least 91 RON, but with reduced output.

2) Abbreviation for roller rocker finger

Engines →		Petrol engine	Petrol engine	Petrol engine
Displacement	l	1,4	1.4	1.4
Codes		**ANX**	**APE**	**APQ**
Manufactured	from	01.98	10.99	01.98
	to	2000	2001	2000
No. of cylinders/valves per cylinder		4/2	4/4 RRF 2)	4/2
Power	kW at rpm	44/4700	55/5000	44/4700
Torque	Nm at rpm	116/2800…3200	126/3800	116/2800…3200
Bore	∅ mm	76.5	76.5	76.5
Stroke	mm	75.6	75.6	75.6
Compression ratio		10.2	10.5	10.2
Injection/ignition		Motronic MP 9.0	Motronic ME 7.5.10	Motronic MP 9.0
RON	unleaded, at least	95 1)	95 1)	95 1)
Market		RoW	RoW	RoW
Onboard diagnosis		---	---	---

1) Under exceptional circumstances petrol unleaded, at least 91 RON, but with reduced output.

2) Abbreviation for roller rocker finger

Protected by copyright. Copyright by Volkswagen AG. Volkswagen AG does not guarantee or accept any liability with respect to the correctness of information in this document. Copyright by Volkswagen AG. Protected by copyright. Copying for private or commercial purposes, in part or in whole, is not permitted unless authorised by Volkswagen AG.
satelettronica

Engines →	Petrol engine	Petrol engine	Petrol engine
Displacement l	1,4	1.6	1.4
Codes	**AQQ**	**ARC**	**AUA**
Manufactured from	07.99	10.99	10.99
to	2001	2002	2002
No. of cylinders/valves per cylinder	4/4 RRF 3)	4/4	4/4 RRF 3)
Power kW at rpm	74/6000	92/6200	55/5000
Torque Nm at rpm	126/4400	150/4500	126/3800
Bore ∅ mm	76.5	76.5	76.5
Stroke mm	75.6	86.9	75.6
Compression ratio	10.5	10.5	10.5
Injection/ignition	Magneti Marelli 4 AV	Simos 3PC	Magneti Marelli 4 AV
RON unleaded, at least	95 1)	98 2)	95 1)
Market	RoW	RoW	RoW
Onboard diagnosis	---	---	---

1) Under exceptional circumstances petrol unleaded, at least 91 RON, but with reduced output.

2) Under exceptional circumstances super unleaded, at least 95 RON, but with reduced output.

3) Abbreviation for roller rocker finger

Engines →	Petrol engine	Petrol engine	Petrol engine	Petrol engine
Displacement l	1,4	1.0	1.4	1.6
Codes	**AUB**	**AUC**	**AUD**	**AVY**
Manufactured from	10.99	10.99	10.99	05.00
to	2002	2002	2002	2002
No. of cylinders/valves per cylinder	4/4 RSH 3)	4/2	4/2	4/4 RSH 3)
Power kW at rpm	74/6000	37/5000	44/5000	92/6200
Torque Nm at rpm	128/4500	86/3600	116/3000	150/4500
Bore ∅ mm	76.5	67.1	76.5	76.5
Stroke mm	75.6	70.6	75.6	86.9
Compression ratio	10.5	10.7	10.4	10.5
Injection/ignition	Magneti Marelli 4 LV	Motronic ME 07/05/2010	Motronic ME 7.5.10	Simos 3
RON unleaded, at least	95 1)	95 1)	95 1)	98 2)
Market	RoW	RoW	RoW	RoW
Onboard diagnosis	---	yes	---	yes

1) Under exceptional circumstances petrol unleaded, at least 91 RON, but with reduced output.

2) Under exceptional circumstances super unleaded, at least 95 RON, but with reduced output.

Protected by copyright. Copying for private or commercial purposes, in whole, is not permitted unless authorised by Volkswagen AG. Volkswagen AG does not guarantee or accept any liability with respect to the correctness of information in this document. Copyright by Volkswagen AG.

satelettronica

3) Abbreviation for roller rocker finger

Diesel engines

Engines	→	Diesel engine	Diesel engine	Diesel engine
Displacement	l	1,9	1.9	1.7
Codes		**AEF**	**AGD**	**AHG**
Manufactured	from	from 11.95	07.96	04.97
	to	2002	04.00	12.99
No. of cylinders/valves per cylinder		4/2	4/2	4/2
Power	kW at rpm	47/4400	47/4200	42/4200
Torque	Nm at rpm	125/2000…3000	124/2200…2800	112/2200…2600
Bore	∅ mm	79.5	79.5	79.5
Stroke	mm	95.5	95.5	86.4
Compression ratio		22.5	19.5	19.5
Injection/ignition		Nat. asp. diesel (NAD)	SDI	SDI
CN	min.	49	49	49
Market		RoW	RoW	RoW
Onboard diagnosis		---	---	---

Engines	→	Diesel engine	Diesel engine	Diesel engine
Displacement	l	1,7	1.4	1.9
Codes		**AKU**	**AMF**	**ASX**
Manufactured	from	08.97	10.99	05.00
	to	05.00	2002	2002
No. of cylinders/valves per cylinder		4/2	3/2	4/2
Power	kW at rpm	44/4200	55/4000	47/4200
Torque	Nm at rpm	115/2200…3000	195/2200	124/2000…2800
Bore	∅ mm	79.5	79.5	79.5
Stroke	mm	86.4	95.5	95.5
Compression ratio		19.5	19.5	19.5
Injection/ignition		SDI	TDI unit injector	SDI
CN	min.	49	49	49
Market		RoW	RoW	RoW
Onboard diagnosis		---	---	---

Copyright by Volkswagen AG. Protected by copyright. Copying for private or commercial purposes, in part or in whole, is not permitted unless authorised by Volkswagen AG. Volkswagen AG does not guarantee or accept any liability with respect to the correctness of information in this document.
satelittunica

2 Service work

This chapter provides information on the following subjects:

Service tables ⇒ page 6

Delivery inspection ⇒ page 8

Oil change service ⇒ page 9

Inspection service ⇒ page 11

2.1 Service tables

VW engine oil standards ⇒ page 6

Filter change intervals ⇒ page 6

Toothed belt change intervals ⇒ page 7

Service intervals ⇒ page 7

2.1.1 VW engine oil standards

Caution

Only engine oils approved by VW may be used. Up-to-date information ⇒ ServiceNet, Technical information, Inspection and maintenance, Approved oils

POLO 6N	
VW ENGINE OIL STANDARDS	
PETROL ENGINES	
4-cylinder engines	501 01/502 00
DIESEL ENGINES	
4-cylinder engines without unit injector	505 00/505 01
3-cylinder unit injector engines without diesel particulate filter	505 01

2.1.2 Filter change intervals

Filter change intervals			
ENGINE OIL FILTER			
SD, engine code: AEF	According to service interval display		
All remaining vehicles	Every 15,000 km or 1 year		
AIR FILTER			
All engine types ► 1999	Every 60,000 km or 2 years		
All engine types 2000 ►	Every 60,000 km or 4 years		
FUEL FILTER [1)]			
All diesel engines	Diesel conforming to EN 590	Diesel not conforming to EN 590	Biodiesel -RME-

Protected by copyright. Copying for private or commercial purposes, in part or in whole, is not permitted unless authorised by Volkswagen AG. Volkswagen AG does not guarantee or accept any liability with respect to the correctness of information in this document. Copyright by Volkswagen AG.

satelettronica

Filter change intervals						
	Change	Drain water	Change	Drain water	Change	Drain water
	Every 60,000 km	Every 30,000 km	Every 30,000 km	Every 15,000 km	Every 30,000 km	Every 15,000 km
DUST AND POLLEN FILTER						
All engine types	Every 30,000 km or 2 years					

1) When using diesel fuel with a high sulphur content, the fuel filter must be changed at 7,500 km. Countries where the diesel has a high sulphur content ⇒ page 23 .

2.1.3 Toothed belt change intervals

Toothed belt change intervals				
Diesel engines				
Engine type	Engine code	Period	Change interval	Tensioning roller
1.7 l SDI	AHG, AKU	Up to model year 2000	Every 60,000 km	---
		From model year 2001	Every 90,000 km	---
1.4 l, TDI unit injector	AMF	Up to model year 2000	Every 60,000 km	Tensioning roller: every 60,000 km
	AMF	From model year 2001	Every 90,000 km	Tensioning roller: every 90,000 km
1.9 l SDI	AGD, ASX	Since introduction	Every 90,000 km	---

Note

The test intervals for engine codes not listed here can be found in the maintenance table or chapter "Inspection service"
⇒ page 11

2.1.4 Service intervals

Petrol and diesel engines

Models	From - to	Engine/Engine code/PR No./ Remarks	Intervals: Service
Polo	Since introduction	Diesel, in countries where the sulphur content in fuel is high	Oil change service every 7,500 km or 1 year
Polo	11.95►10.01	SD engine code: AEF	Oil change service flexible from 7,500 km to max. 15,000 km
			Inspection service flexible to max. 1 year
			Inspection service every 30,000 km
Polo	10.94►10.01	Petrol and SDI / TDI	Oil change service every 15,000 km or 1 year
			Inspection service every 12 months

Protected by copyright. Copying for private or commercial purposes, in part or in whole, is not permitted unless authorised by Volkswagen AG. Volkswagen AG does not guarantee or accept any liability with respect to the correctness of information in this document.
satelettronica

Models	From - to	Engine/Engine code/PR No./ Remarks	Intervals: Service
			Inspection service every 30,000 km

2.2 Delivery inspection

Notes on performing inspection service

- The sequence of the individual service tasks has been tested and optimised. Therefore, it should be followed to avoid unnecessary interruptions in the work.
- For stock vehicles and vehicles in storage perform measures according to ⇒ ElsaWin - “Maintenance tables” !

Scope of work	Page
– Fuse(s) (in ashtray): insert	
– All switches, electrical consumers, gauges and other controls: check function	
– Service interval display: reset	⇒ page 86
– Electric windows: carry out initialisation (activation)	⇒ page 38
– Clock: set to correct time	⇒ page 103
– Radio and radio-navigation system: activate anti-theft coding, store local radio stations to station buttons	⇒ page 67
– Radio card (part of radio and radio-navigation system operating instructions): stick radio serial number and fixed code number sticker onto radio card	⇒ page 67
– Check vehicle interior for cleanliness: front and rear seats, interior trim, carpets/mats, windows	
– Seat and carpet protective coverings: remove	
– Fit all equipment which has been packed inside vehicle (if fitted): Mats, wiper arms, spoilers, roof aerial, wheel trims/hub caps, valve extensions	
– Edge protection on doors (plastic film): remove	
– Check vehicle exterior for cleanliness: paintwork, decorative parts, windows, wiper blades	
– Wheel bolts: tighten to specified torque	⇒ page 65
– Tyre pressure of all 4 wheels and spare wheel: set to correct pressures (in the factory the tyres are inflated to 3.5 bar)	⇒ page 28
– Vehicle from below; engine (components in engine compartment), brake system, axles, gearbox/ final drive, steering, joint protective bellows/boots, hoses, fluid reservoirs: visual check for leaks and damage (without removing engine compartment cover for noise insulation)	⇒ page 58
– Vehicle underside (floor pan): inspect for damage	⇒ page 104
– Battery: check battery terminals by hand for tightness	⇒ page 27
– Window wipe/wash and headlight washer system: check function and jet settings; replenish fluid G 052 164 to maximum	⇒ page 77

Copyright by Volkswagen AG. Volkswagen AG does not guarantee or accept any liability with respect to the correctness of information in this document. Copying for private or commercial purposes, in part or in whole, is not permitted unless authorised by Volkswagen AG.
satelettronica

Scope of work	Page
– Engine oil level: check, top-up with engine oil if necessary; observe oil specifications! ⇒ page 6	⇒ page 58
– Engine and components in engine compartment: inspect for leaks and damage (from above).	⇒ page 58
– Coolant level: check it is at maximum	⇒ page 46
– Power assisted steering: check fluid level	⇒ page 84
– Brake fluid level: check level is at maximum	⇒ page 37
– “Your first service” sticker: attach sticker to driver side door pillar (B-pillar); the sticker can be found on an instruction attached at front of vehicle wallet. Destroy the instruction after attaching the sticker!	⇒ page 18
– Vehicle data sticker: stick into service schedule	⇒ page 18
– Service schedule: enter delivery inspection	
– Owner's literature: check that literature is complete and prepare for delivery to customer.	
– Carry out road test	⇒ page 64

2.3 Oil change service

Oil change service every 15,000 km ⇒ page 9

Oil change service according to flexible service interval display (7,500…15,000 km) ⇒ page 10

2.3.1 Oil change service every 15,000 km

Note

- *In countries where diesel has a high sulphur content, change oil every 7,500 km.*
- *Affected countries with a high sulphur content ⇒ page 23*
- *The sequence of the individual service tasks has been tested and optimised. Therefore, it should be followed to avoid un-necessary interruptions in the work.*
- *When faults requiring repair measures are found during an oil change service, inform the customer.*
- *Ask customer if new wiper blades should be fitted and if he or she wishes to have Windscreen Clear G 052 164 (cleanser and anti-freeze) in the washer system.*
- *Removing and installing engine compartment cover -bottom- (noise insulation tray) ⇒ page 58*

Protected by copyright. Copying for private or commercial purposes, in part or in whole, is not permitted unless authorised by Volkswagen AG. Volkswagen AG does not guarantee or accept any liability with respect to the correctness of information in this document. Copyright by Volkswagen AG.
satelettronica

Copyright by Volkswagen AG. Volkswagen AG does not guarantee or accept any liability with respect to the correctness of information in this document. Copyright by Volkswagen AG. Reproduction, publication and distribution in whole or in part not permitted unless authorised by Volkswagen AG.

Vehicles driving more than 15,000 km per year:	Page
Vehicles with petrol engines	
Vehicles with diesel engine codes AGD, AHG, AKU, AMF, ASX	
– Toothed belt: Check for wear -SDI / TDI engines ▸ 2000-	⇒ page 104
– Fuel filter: drain water ◆ Every 15,000 km for vehicles with diesel engine model year 1995, using diesel according to DIN EN 590 ◆ Every 15,000 km when using diesel not conforming to DIN EN 590 ◆ Every 15,000 km for vehicles with diesel engine from model year 1996, using biodiesel according to DIN EN 14214	⇒ page 44
– Engine oil: drain or extract, renew oil filter ◆ If engine oil is drained rather than being extracted with the used oil collection and extraction unit, replace oil drain plug	⇒ page 59
– Front disc brake pads: check thickness	⇒ page 32
– Engine oil: replenish	⇒ page 59
– Service interval display: reset	⇒ page 86
– Enter date for next service on sticker and attach sticker to driver side door pillar (B-pillar).	⇒ page 18

2.3.2 Oil change service according to flexible service interval display (7,500…15,000 km)

Note

- *In countries where diesel has a high sulphur content, change oil every 7,500 km.*
- *Affected countries with a high sulphur content ⇒ page 23*
- *The sequence of the individual service tasks has been tested and optimised. Therefore, it should be followed to avoid unnecessary interruptions in the work.*
- *When faults requiring repair measures are found during an oil change service, inform the customer.*
- *Ask customer if new wiper blades should be fitted and if he or she wishes to have Windscreen Clear G 052 164 (cleanser and anti-freeze) in the washer system.*
- *Removing and installing engine compartment cover -bottom- (noise insulation tray) ⇒ page 58*

Vehicles from model year 1996 with diesel engine code AEF	Page
– Fuel filter: drain water ◆ For vehicles with diesel engine, model year 1995, using diesel according to DIN EN 590 ◆ For vehicles using diesel not conforming to DIN EN 590 ◆ For vehicles with diesel engine from model year 1996, using biodiesel according to DIN EN 14214	⇒ page 44
– Engine oil: drain or extract, renew oil filter ◆ If engine oil is drained rather than being extracted with the used oil collection and extraction unit, replace oil drain plug	⇒ page 59

satelettronica

Vehicles from model year 1996 with diesel engine code AEF	Page
– Front disc brake pads: check thickness	⇒ page 32
– Engine oil: replenish	⇒ page 59
– Service interval display: reset	⇒ page 86
– Enter date for next service on sticker and attach sticker to driver side door pillar (B-pillar).	⇒ page 18

2.4 Inspection service

Inspection service every 12 months ⇒ page 11

Inspection service every 30,000 km ⇒ page 13

2.4.1 Inspection service every 12 months

Note

- *In countries where diesel has a high sulphur content, change oil every 7,500 km.*
- *Affected countries with a high sulphur content ⇒ page 23*
- *The sequence of the individual service tasks has been tested and optimised. Therefore, it should be followed to avoid unnecessary interruptions in the work.*
- *The sequence of task descriptions corresponds to the sequence of inspection service work, which is the most commonly performed service.*
- *If faults requiring repair measures are found during an inspection service, inform the customer.*
- *Ask customer if new wiper blades should be fitted and if he or she wishes to have Windscreen Clear G 052 164 (cleanser and anti-freeze) in the washer system.*
- *Check if storage life date of first aid box has been exceeded and if warning triangle is fitted.*
- *Removing and installing engine compartment cover -bottom- (noise insulation tray) ⇒ page 58*

Scope of work	Page
Electrics	
– Front lights - check function: side lights, dipped beam, main beam, fog lights, turn signals, hazard warning lights	
– Rear lights - check function: brake lights (including 3rd brake light), tail lights, reversing lights, rear fog light, number plate light, luggage compartment light, turn signals, hazard warning lights	
– Interior and glove compartment lighting, cigarette lighter, warning lamps and horn: check function	
– Carry out vehicle system test	⇒ page 38
Vehicle exterior	
– Door arrester and securing pins: grease	⇒ page 102
– Windscreen wash/wipe system and headlight washer system: check function and jet settings	⇒ page 77
– Wiper blades: check for damage; check park position; only if wiper blades “judder”: check setting angle	⇒ page 82
Tyres	

Protected by copyright. Copying for private or commercial purposes, in part or in whole, is not permitted unless authorised by Volkswagen AG. Volkswagen AG does not guarantee or accept any liability with respect to the correctness of information in this document. Copyright by Volkswagen AG.

sateletronica

Scope of work	Page
– Front left tyre: check condition, wear pattern, inflation pressure; enter tread depth _____ mm	⇒ page 28
– Rear left tyre: check condition, wear pattern, inflation pressure; enter tread depth _____ mm	⇒ page 28
– Rear right tyre: check condition, wear pattern, inflation pressure; enter tread depth _____ mm	⇒ page 28
– Front right tyre: check condition, wear pattern, inflation pressure, enter tread depth _____ mm	⇒ page 28
– Spare wheel: check condition, wear pattern, inflation pressure; enter tread depth _____ mm	⇒ page 28
Underside of vehicle	
– Engine oil: drain or extract; renew oil filter • If engine oil is drained rather than being extracted with the used oil collection and extraction unit, replace oil drain plug	⇒ page 59
– Engine and components in engine compartment: inspect for leaks and damage (from below).	⇒ page 58
– Gearbox, final drive and drive shaft boots: inspect for leaks and damage.	⇒ page 40
– Brake system: inspect for leaks and damage.	⇒ page 32
– Front and rear brake pads/linings: check thickness	⇒ page 32
– Exhaust system: inspect for leaks, firm seating and damage.	
– Track rod ends: check clearance, firm seating and boots	⇒ page 101
– Swivel joints: visual check of swivel joint boots for leaks and damage	⇒ page 26
Engine compartment	
– Engine oil: replenish	⇒ page 59
– Battery Check	⇒ page 26
– Engine and components in engine compartment: visual check for leaks and damage (from above)	⇒ page 58
– Window wash/wipe system: replenish with Windscreen Clear - G 052 164-	⇒ page 77
– Cooling system: check frost protection and coolant level	⇒ page 46
– Air filter: clean housing and renew filter element • Every 2 years or every 60,000 km whichever occurs first • Only applies to vehicles up to model year 1999	⇒ page 49
– Air filter: clean housing and renew filter element • Every 4 years or every 60,000 km whichever occurs first • Only applies to vehicles from model year 2000	⇒ page 49
– Fuel filter: drain water • Every 15,000 km for vehicles with diesel engine using biodiesel according to EN 14214 • Every 15,000 km when using diesel not conforming to EN 590 • For vehicles with diesel engine, model year 1995, using diesel according to EN 590	⇒ page 44
– Toothed belt: check for wear • SDI / TDI engines ▸ 2000	⇒ page 104
– Camshaft drive toothed belt: check • Only valid for 4-cylinder petrol engine without prescribed change interval	⇒ page 112

Protected by copyright. Copying for private or commercial purposes, in part or in whole, is not permitted unless authorised by Volkswagen AG. Volkswagen AG does not guarantee or accept any liability with respect to the correctness of information in this document. Copyright by Volkswagen AG.
satelettronica

Scope of work	Page
– Change brake fluid • Every 2 years • Additional work as a separate charge!	⇒ page 34
– Brake fluid level (dependent upon brake pad/lining wear): check	⇒ page 37
– Carry out exhaust emissions test, additional work as a separate charge! • 3 years after initial registration and then every 2 years [2)]	⇒ page 115
– Idling speed: check and adjust if necessary • Valid for diesel engines with code AEF, when no exhaust emissions test has been performed	⇒ page 49
Headlight adjustment / documentation / final checks	
– Headlight adjustment: check • Vehicles ►1996: every 12 months • Vehicles 1997►: every 30,000 km	⇒ page 69
– Service sticker: enter date of next service (including change of brake fluid) on sticker and secure sticker to driver side door pillar (B-pillar)	⇒ page 18
– Carry out road test	⇒ page 64

2) Applicable only for countries where there are no country specific mandatory exhaust emission regulations.

2.4.2 Inspection service every 30,000 km

Note

- *In countries where diesel has a high sulphur content, change oil every 7,500 km.*
- *Affected countries with a high sulphur content ⇒ page 23*
- *The sequence of the individual service tasks has been tested and optimised. Therefore, it should be followed to avoid unnecessary interruptions in the work.*
- *The sequence of task descriptions corresponds to the sequence of inspection service work, which is the most commonly performed service.*
- *If faults requiring repair measures are found during an inspection service, inform the customer.*
- *Ask customer if new wiper blades should be fitted and if he or she wishes to have Windscreen Clear G 052 164 (cleanser and anti-freeze) in the washer system.*
- *Check if storage life date of first aid box has been exceeded and if warning triangle is fitted.*
- *Removing and installing engine compartment cover -bottom- (noise insulation tray) ⇒ page 58*

Scope of work	Page
Electrics	
– Front and tail lights, turn signals, hazard warning lights, luggage compartment lights: check function	

Protected by copyright. Copyright by Volkswagen AG. Volkswagen AG does not guarantee or accept any liability with respect to the correctness of information in this document. Copyright by Volkswagen AG. Reproduction, publication and commercial use is not permitted unless authorised by Volkswagen AG.
satelettronica

Scope of work	Page
– Interior and glove compartment lighting, cigarette lighter, warning lamps and horn: check function	
– Carry out vehicle system test	⇒ page 38
– Service interval display: reset	⇒ page 86
Vehicle exterior	
– Door arrester and securing pins: grease	⇒ page 102
– Sunroof: check function, clean guide rails and lubricate with special grease - G 000 450 02-	⇒ page 76
– Folding fabric sunroof: lubricate guide rails	⇒ page 76
– Windscreen wash/wipe system and headlight washer system: check function and jet settings	⇒ page 77
– Wiper blades: check for damage; check park position; only if wiper blades “judder”: check setting angle	⇒ page 82
Tyres	
– Front left tyre: check condition, wear pattern, inflation pressure; enter tread depth _____ mm	⇒ page 28
– Rear left tyre: check condition, wear pattern, inflation pressure; enter tread depth _____ mm	⇒ page 28
– Rear right tyre: check condition, wear pattern, inflation pressure; enter tread depth _____ mm	⇒ page 28
– Front right tyre: check condition, wear pattern, inflation pressure, enter tread depth _____ mm	⇒ page 28
– Spare wheel: check condition, wear pattern, inflation pressure; enter tread depth _____ mm	⇒ page 28
Underside of vehicle	
– Engine oil: drain or extract; renew oil filter • If engine oil is drained rather than being extracted with the used oil collection and extraction unit, replace oil drain plug	⇒ page 59
– Engine and components in engine compartment: inspect for leaks and damage (from below)	⇒ page 58
– Poly V-belt: check condition and tension belt • Engines without automatic tensioning roller	⇒ page 40
– Poly V-belt: check condition • Engines with automatic tensioning roller • Every 60,000 km	⇒ page 40
– Gearbox, final drive and drive shaft boots: inspect for leaks and damage.	⇒ page 40
– Manual gearbox/final drive: check oil level	⇒ page 68
– Brake system: inspect for leaks and damage	⇒ page 32
– Front and rear brake pads/linings: check thickness	⇒ page 32
– Underbody protection: visual check for damage	⇒ page 104
– Exhaust system: inspect for leaks, firm seating and damage.	
– Track rod ends: check clearance, firm seating and boots	⇒ page 101
– Swivel joints: visual check of swivel joint boots for leaks and damage	⇒ page 26
Engine compartment	
– Engine oil: replenish	⇒ page 59
– Engine and components in engine compartment: inspect for leaks and damage (from above)	⇒ page 58

Copyright by Volkswagen AG. Volkswagen AG does not guarantee or accept any liability with respect to the correctness of information in this document. Copying for private or commercial purposes, in part or whole, is not permitted unless authorised by Volkswagen AG.
satelettronica

Scope of work	Page
– Window wash/wipe system: replenish fluid	⇒ page 77
– Cooling system: check frost protection and coolant level	⇒ page 46
– Spark plugs: renew • Every 4 years or every 60,000 km whichever occurs first	⇒ page 108
– Dust and pollen filter: renew filter element	⇒ page 101
– Toothed belt: check for wear • SDI / TDI engines ► 2000	⇒ page 104
– Toothed belt and toothed belt tensioning roller: renew • Every 60,000 km: vehicles with engine code AMF ►2000 • Every 90,000 km: vehicles with engine code AMF AMF 2001► • Additional work as a separate charge!	⇒ page 106
– Toothed belt: renew • Every 60,000 km: vehicles with SDI engines - codes AHG and AKU ►2000 • Every 90,000 km: vehicles with SDI engines - codes AHG and AKU 2001► • Every 90,000 km: vehicles with SDI engines - codes AGD and ASX • Additional work as a separate charge!	⇒ page 106
– Toothed belt: check condition and tension, tension toothed belt if necessary • Every 30,000 km: vehicles with engine code AEF ►1999 • Every 90,000 km: vehicles with engine code AEF 2000► • Additional work without a separate charge!	⇒ page 107
– Camshaft drive toothed belt: check • Only valid for 4-cylinder petrol engine without prescribed change interval	⇒ page 112
– Air filter: clean housing and renew filter element • Every 2 years or every 60,000 km whichever occurs first • Only applies to vehicles up to model year 1999	⇒ page 49
– Air filter: clean housing and renew filter element • Every 4 years or every 60,000 km whichever occurs first • Only applies to vehicles from model year 2000	⇒ page 49
– Fuel filter: renew • For vehicles with diesel engine using biodiesel according to EN 14214 • For vehicles with diesel engine using diesel not conforming to EN 590 • For vehicles with diesel engine up to and including model year 1996, using diesel according to EN 590	⇒ page 42
– Fuel filter: drain water • At 30,000, 90,000, 150,000 km etc.: vehicles with diesel engine from model year 1997, using diesel according to EN 590	⇒ page 44

Copyright by Volkswagen AG. Copying for private or commercial purposes, in part or in whole, is not permitted unless authorised by Volkswagen AG. Volkswagen AG does not guarantee or accept any liability with respect to the correctness of information in this document.
satelettronica

Scope of work	Page
– Automatic gearbox: check ATF level • Every 60,000 km	⇒ page 26
– Power assisted steering: check fluid level • Every 60,000 km	⇒ page 84
– Change brake fluid • Every 2 years • Additional work as a separate charge!	⇒ page 34
– Brake fluid level: check	⇒ page 37
– Battery: check	⇒ page 26
– Exhaust emissions test: carry out test • 3 years after initial registration and then every 2 years [3] • Additional work as a separate charge!	⇒ page 115
– Idling speed: check • Valid for diesel engines with code AEF, when no exhaust emissions test has been performed	⇒ page 49
Headlight adjustment / documentation / final checks	
– Headlight adjustment: check • Vehicles ►1996: every 12 months • Vehicles 1997►: every 30,000 km	⇒ page 69
– Service sticker: enter date of next service (including change of brake fluid) on sticker and secure sticker to driver side door pillar (B-pillar)	⇒ page 18
– Carry out road test	⇒ page 64

3) Applicable only for countries where there are no country specific mandatory exhaust emission regulations.

Protected by copyright. Copying for private or commercial purposes, in part or in whole, is not permitted unless authorised by Volkswagen AG. Volkswagen AG does not guarantee or accept any liability with respect to the correctness of information in this document. Copyright by Volkswagen AG.
satelettronica

3 General information

This chapter provides information on the following subjects:

Lifting vehicle ⇒ page 17

Sticker ⇒ page 18

Connecting vehicle diagnostic tester ⇒ page 20

Vehicle identification number ⇒ page 22

Vehicle data sticker ⇒ page 22

Countries where diesel has a high sulphur content ⇒ page 23

Engine code and engine number ⇒ page 23

RME fuel (biodiesel) ⇒ page 23

Type plate ⇒ page 24

3.1 Lifting the vehicle

WARNING

- *Vehicle may be lifted only at points indicated in figure to avoid damaging vehicle floor pan or tipping vehicle.*
- *Never start engine and engage a gear with vehicle lifted as long as even one driven wheel has contact with the floor! Disregarding these warnings risks the danger of an accident!*
- *If work is to be performed under vehicle, it must be supported by suitable jack stands.*

Please note the following:

3.1.1 Trolley jack:

To prevent damage always use a suitable rubber or wooden block.

On no account should vehicle be lifted at the engine sump, gearbox or on front or rear axle as this may cause serious damage.

3.1.2 Lifting platform:

Before driving on to a lifting platform ensure there is sufficient clearance between low lying vehicle components and lifting platform.

Protected by copyright. Copying for private or commercial purposes, in part or in whole, is not permitted unless authorised by Volkswagen AG. Volkswagen AG does not guarantee or accept any liability with respect to the correctness of information in this document. Copyright by Volkswagen AG.
satelettronica

3.1.3 Lifting points for lifting platform and trolley jack:

Front: At reinforcement of floor pan.

> ⚠ **WARNING**
>
> ***On no account must front of vehicle be raised on side member vertical stiffener.***

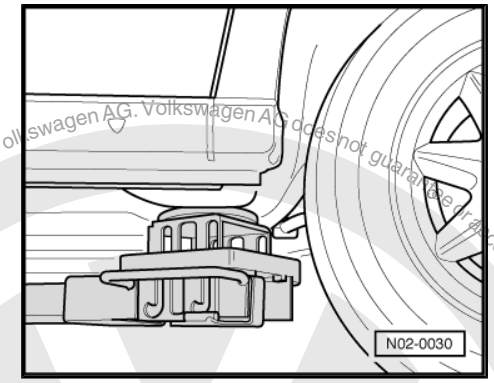

Rear: At mounting bracket -arrow-.

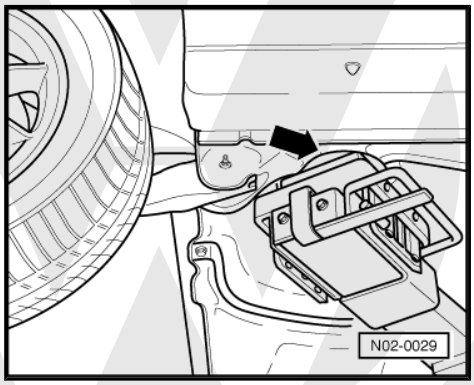

3.2 Sticker

Vehicle data sticker ⇒ page 18

“Your first service” sticker (delivery inspection) ⇒ page 19

“Your next service” sticker ⇒ page 19

3.2.1 Vehicle data sticker

The vehicle data sticker -arrow- is located in rear of vehicle on the left in spare wheel recess. The vehicle data sticker is also found in the service schedule for the customer.

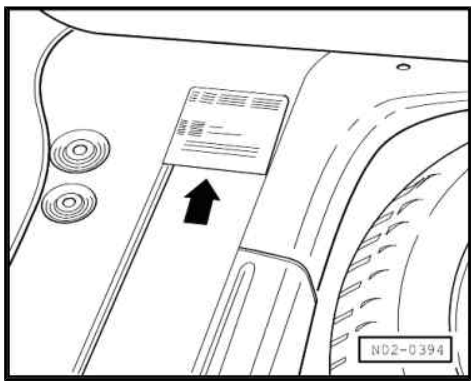

Protected by copyright. Copying for private or commercial purposes, in part or in whole, is not permitted unless authorised by Volkswagen AG. Volkswagen AG does not guarantee or accept any liability with respect to the correctness of information in this document. Copyright by Volkswagen AG.
satelettronica

The sticker contains the following data of the vehicle

1 - Production control number

2 - Vehicle identification number

3 - Model identification number

4 - Model explanation/engine output

5 - Engine and gearbox code letters

6 - Paint number/ interior equipment code

7 - Optional equipment identification number

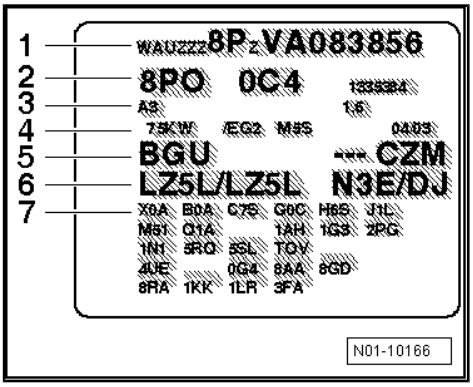

3.2.2 “Your first service” sticker (delivery inspection)

– Attach sticker on driver door pillar (B-pillar); the sticker is found on an instruction which is attached at front in the vehicle wallet. Destroy the instruction after attaching the sticker!

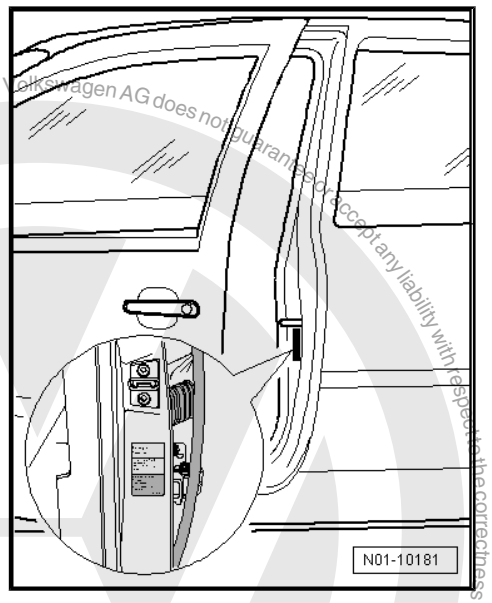

3.2.3 “Your next service” sticker

– “Your next service” sticker: Enter a cross at the position for oil change service or inspection service (next service due) and enter date/odometer reading; if necessary, enter a cross at the position for supplementary information (e.g. renew toothed belt) and changing brake fluid and enter date/odometer reading.

Protected by copyright. Copying for private or commercial purposes, in part or in whole, is not permitted unless authorised by Volkswagen AG. Volkswagen AG does not guarantee or accept any liability with respect to the correctness of information in this document. Copyright by Volkswagen AG.
satelettronica

– Attach sticker to driver door pillar (B-pillar).

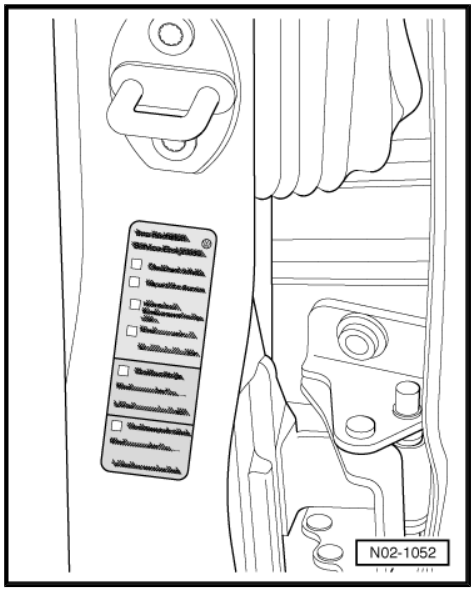

3.3 Connecting vehicle diagnostic tester

Special tools and workshop equipment required

♦ Vehicle diagnosis, testing and information system - VAS 5051 A-

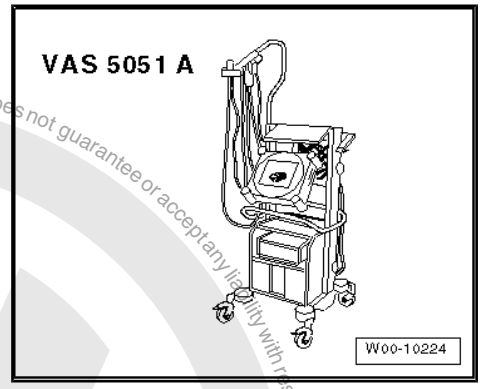

♦ Vehicle diagnostic tester - VAS 5051B-

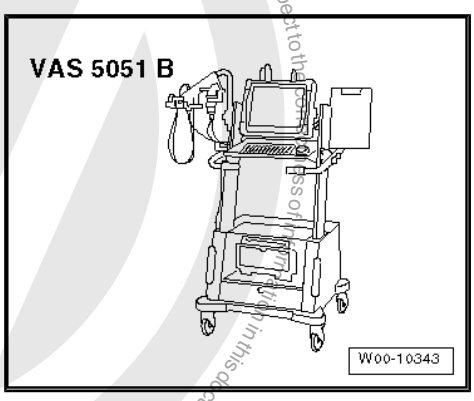

Protected by copyright. Copying for private or commercial purposes, in part or in whole, is not permitted unless authorised by Volkswagen AG. Volkswagen AG does not guarantee or accept any liability with respect to the correctness of information in this document. Copyright by Volkswagen AG.
satelettronica

- Vehicle diagnosis and service information system - VAS 5052- or successor

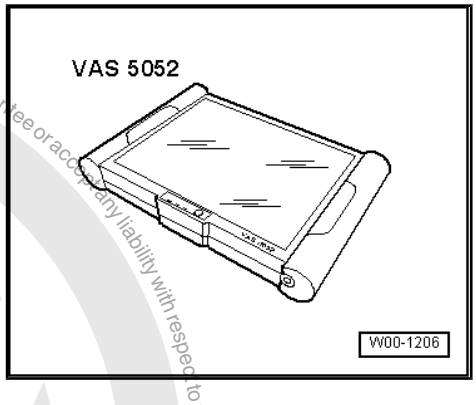

- Diagnostic cable - VAS 5051/6A-

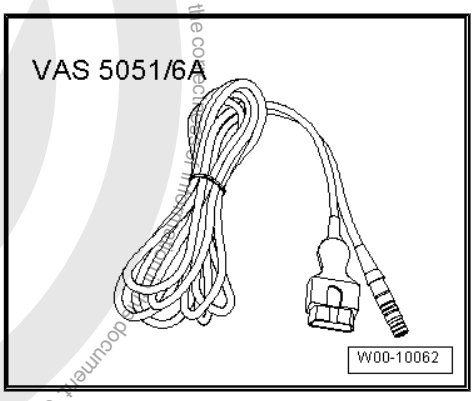

Protected by copyright. Copyright by Volkswagen AG.
Volkswagen AG does not guarantee or accept any liability with respect to the correctness of information in this document. Copyright by Volkswagen AG.
This document is not permitted unless authorised by Volkswagen AG. Volkswagen AG does not guarantee or accept any liability with respect to the correctness of information in this document. Copyright by Volkswagen AG.
Protected by copyright. Copying for private or commercial purposes, in part or in whole, is not permitted unless authorised by Volkswagen AG.

WARNING

- *Always secure testing and measuring equipment on the rear seat during a road test.*
- *Only a passenger may operate these devices while the vehicle is in motion.*

– Insert connector of diagnostic cable - VAS 5051/6A- in diagnostic connection.

Vehicles ► 1997

– Open stowage compartment on driver side and unhook.

– Connect vehicle diagnosis, testing and information system - VAS 5051- or vehicle diagnosis and service information system - VAS 5052- using diagnostic cable - VAS 5051/6A- with ignition switched off.

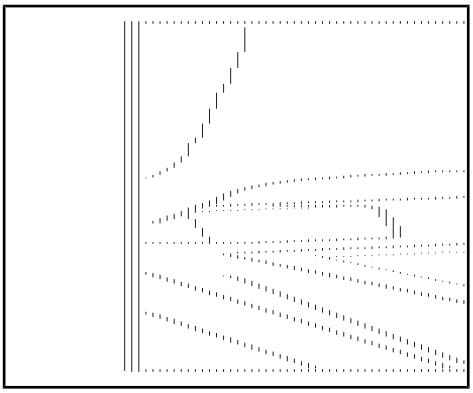

satelettronica

Protected by copyright. Copying for private and commercial purposes, in part or in whole, is not permitted unless authorised by Volkswagen AG. Volkswagen AG does not guarantee or accept any liability with respect to the correctness of information in this document. Copyright by Volkswagen AG.

Vehicles 1998 ►

– Remove cover in front of fuse strip.

– Connect vehicle diagnosis, testing and information system - VAS 5051- or vehicle diagnosis and service information system - VAS 5052- using diagnostic cable - VAS 5051/6A- with ignition switched off.

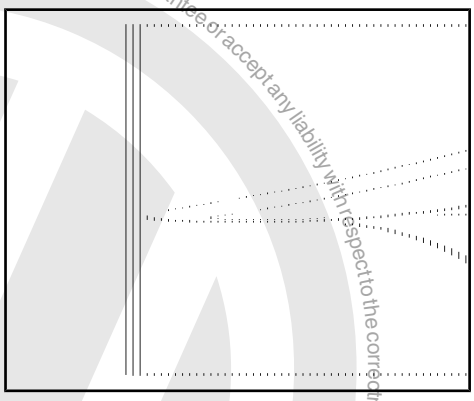

Vehicles 2000 ►

– Pull ashtray insert out of centre console.

– Connect vehicle diagnosis, testing and information system - VAS 5051- or vehicle diagnosis and service information system - VAS 5052- using diagnostic cable - VAS 5051/6A- with ignition switched off.

– Apply handbrake.

– Automatic gearbox: Move selector lever to position “P” or “N”.

– Manual gearbox: gear lever in neutral.

– Switch on tester.

– Switch on ignition.

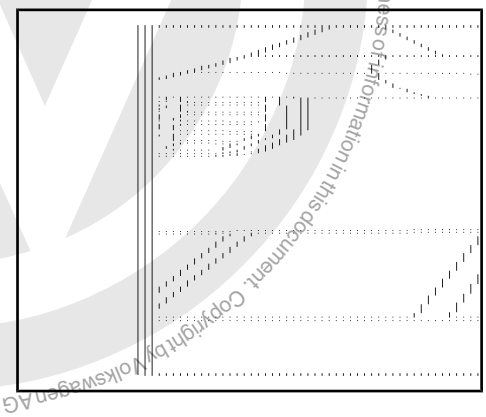

Now follow information given on screen to start desired functions.

3.4 Vehicle identification number

The vehicle identification number is located in the plenum chamber. It is visible through a window -arrow- in the plenum chamber cover.

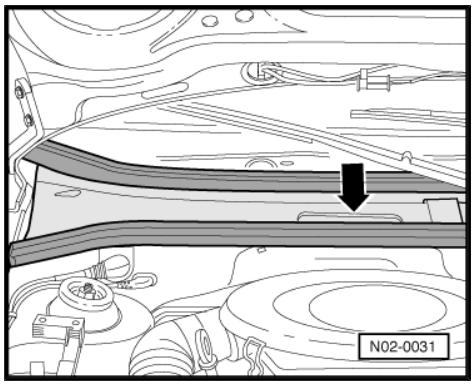

3.4.1 Interpretation of vehicle identification number:

WVW	ZZZ	6N	Z	Y[4) 5)]	Y	000 001
Manufacturer's mark	Filler characters	Model	Filler characters	Model year 2000	Production location	Serial number

4) Model year 2000

5) Model year 2001

3.5 Vehicle data sticker

– ⇒ page 18

satelettronica

Protected by copyright. Copying for private or commercial purposes, in part or in whole, is not permitted unless authorised by Volkswagen AG. Volkswagen AG does not guarantee or accept any liability with respect to the correctness of information in this document. Copyright by Volkswagen AG.

3.6 Countries where diesel has a high sulphur content

For vehicles with TDI unit injector and VEP engines an oil change service must always be performed every 7,500 km in the following countries:

Egypt	Jordan	Macedonia	South Africa
Armenia	Yugoslavia[6)]	Moldova	Surinam
Bahrain	Cambodia	Mozambique	Tajikistan
Bangladesh	Kazakhstan	Myanmar	Tanzania
Chile	Kenya	New Caledonia	Turkey
Dominican Republic	Columbia	Nigeria	Uruguay
El Salvador	Cuba	Oman	Uzbekistan
Ecuador	Kuwait	Pakistan	Venezuela
Ghana	Lebanon	Panama	United Arab Emirates
Guatemala	Madagascar	Papua New Guinea	Vietnam
Honduras	Malawi	Peru	
Indonesia	Malaysia	Russia (East & West)	
Iraq	Mali	Saudi Arabia	
Iran	Morocco	Zimbabwe	
Jamaica	Mauritius	Sri Lanka	

6) Yugoslavia = Serbia, Montenegro, Vojvodina, Kosovo

3.7 Engine code and engine number

Engine code and engine number are located:

- ⇒ Technical data; Rep. gr. 00 ; Engine number .
- On vehicle data sticker, in rear of vehicle in the spare wheel recess or in the luggage compartment ⇒ page 18 .
- On vehicle data sticker in service schedule for the customer.

3.8 RME fuel (biodiesel)

RME fuel may only be used in vehicles which have been approved for this purpose by Volkswagen - either in the standard version or in vehicles which have had special equipment (PR No. 2G0) **⇒ page 18** **.**

Caution

- *When RME fuel is used and your vehicle is not suitable for this, the fuel system can be damaged.*
- *When filling the tank with biodiesel, only use RME fuel conforming to DIN EN 14214 (FAME)!*
- *When biodiesel is used which does not conform to the required standard, the fuel filter can become blocked.*

For VW diesel engines the RME fuel must conform to DIN EN 14214 (FAME) from Week 05/2004.

- RME means “Rapeseed Methyl Ester”.
- DIN means “German Standards Authority e.V”.

satelettronica

- EN means “Euro standard”.
- FAME means “Fatty Acid Methyl Ester”.

Characteristics of RME fuel

- Performance can slightly be lower when using biodiesel.
- Fuel consumption can slightly be higher when using biodiesel.
- RME can be used in winter at temperatures to approx. -10°C
- At ambient temperatures below -10°C we recommend using winter diesel fuel.

Note

- *When using biodiesel observe the changed intervals for draining and changing the fuel filter.*
- *If it is planned not to use the vehicle for approx. two weeks, it is recommended to fill the tank with original diesel beforehand and drive approx. 50 km, to prevent damage to the fuel injection system.*

3.9 Type plate

The type plate is attached to front lock carrier -arrow-

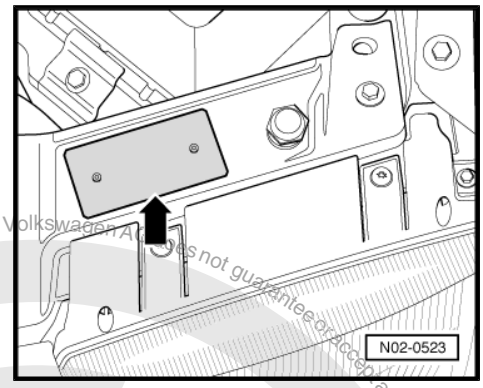

or

to right bulkhead -arrow-.

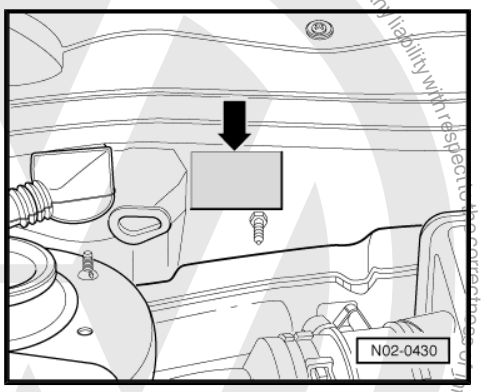

Vehicles for certain export countries have no type plate.

Protected by copyright. Copying for private or commercial purposes, in part or in whole, is not permitted unless authorised by Volkswagen AG. Volkswagen AG does not guarantee or accept any liability with respect to the correctness of information in this document. Copyright by Volkswagen AG.
satelettronica

Copyright by Volkswagen AG. Volkswagen AG does not guarantee or accept any liability with respect to the correctness of information in this document. Copying for private or commercial purposes, in part or in whole, is not permitted unless authorised by Volkswagen AG.

4 Descriptions of work:

This chapter provides information on the following subjects:

- Swivel joints: inspecting ⇒ page 26
- Driver and front passenger airbags: visual check of airbag units ⇒ page 113
- Automatic gearbox: checking ATF level, topping-up ATF if necessary ⇒ page 26
- Battery: checking ⇒ page 26
- Battery: checking battery terminal clamps for secure seating ⇒ page 27
- Check tyres: condition, wear pattern, inflation pressure, tread depth ⇒ page 28
- Brake system: visual check for leaks and damage ⇒ page 32
- Front and rear brake pads: checking thickness ⇒ page 32
- Brake system: changing brake fluid ⇒ page 34
- Brake fluid level: checking ⇒ page 37
- Electric windows: performing initialisation (activation) ⇒ page 38
- Vehicle system test: carrying out test ⇒ page 38
- Folding fabric sunroof: cleaning and lubricating guide rails ⇒ page 39
- Protective bellows: inspecting ⇒ page 40
- Checking first aid box expiry date ⇒ page 40
- Poly V-belts: checking condition, tensioning if necessary ⇒ page 40
- Fuel filter: renewing ⇒ page 42
- Fuel filter: draining water (diesel engine) ⇒ page 44
- Cooling system: checking frost protection and coolant level ⇒ page 46
- Idling speed: checking, adjusting if necessary ⇒ page 49
- Air filter: cleaning housing and renewing filter element ⇒ page 49
- Engine cover -top-: removing and installing ⇒ page 57
- Engine compartment cover - bottom - (noise insulation): removing and installing ⇒ page 58
- Engine oil level: checking ⇒ page 58
- Engine oil: draining or extracting and topping up; renewing oil filter ⇒ page 59
- Engine and components in engine compartment: inspecting for leaks and damage (from above and below) ⇒ page 64
- Carrying out road test ⇒ page 64
- Wheel securing bolts: tightening to specified torque ⇒ page 65
- Radio/radio-navigation system: activating anti-theft coding ⇒ page 67

satelettronica

- Manual gearbox/final drive: checking oil level, topping-up oil if necessary ⇒ page 68
- Headlight adjustment: checking, adjusting headlight if necessary ⇒ page 69
- Sunroof: checking function, cleaning and lubricating guide rails ⇒ page 76
- Window wash/wipe system and headlight washer system: checking function ⇒ page 77
- Wiper blades: checking park position and setting angle ⇒ page 82
- Power assisted steering: checking fluid level ⇒ page 84
- Service interval display: resetting ⇒ page 86
- Track rod ends: checking clearance, security and boots ⇒ page 101
- Dust and pollen filter: renewing filter element ⇒ page 101
- Door arrester: lubricating ⇒ page 102
- Clock: setting to correct time ⇒ page 103
- Underbody protection: visual check visually for damage ⇒ page 104
- Toothed belt: checking for wear ⇒ page 104
- Camshaft drive toothed belt: checking (4-cylinder petrol engine) ⇒ page 112
- Camshaft drive toothed belt and tensioning roller: renewing, PD diesel engine ⇒ page 106
- Toothed belt: renewing ⇒ page 106
- Toothed belt: checking condition and tensioning, tensioning toothed belt if necessary ⇒ page 107
- Spark plugs: renewing ⇒ page 108

4.1 Swivel joints: inspecting

– Check swivel joint boots -arrow- for leaks and damage.

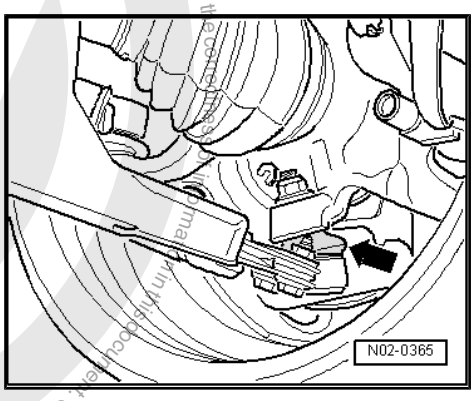

4.2 Automatic gearbox: checking ATF level, topping up if necessary

Procedure: »Automatic gearbox« ⇒ Automatic gearbox; Rep. gr. 37 ; Checking ATF level and topping up »Checking ATF level and topping up«

4.3 Battery: checking

– Procedure: »Electrical system« ⇒ Electrical system; Rep. gr. 27 ; Battery »Battery«

Protected by copyright. Copying for private or commercial purposes, in part or in whole, is not permitted unless authorised by Volkswagen AG. Volkswagen AG does not guarantee or accept any liability with respect to the correctness of information in this document. Copyright by Volkswagen AG.
satelettronica

Protected by copyright. Copying for private or commercial purposes, in part or in whole, is not permitted unless authorised by Volkswagen AG. Volkswagen AG does not guarantee or accept any liability with respect to the correctness of information in this document. Copyright by Volkswagen AG.

4.4 Battery: checking battery terminal clamps for secure seating

Special tools and workshop equipment required

- Torque wrench - V.A.G 1331-

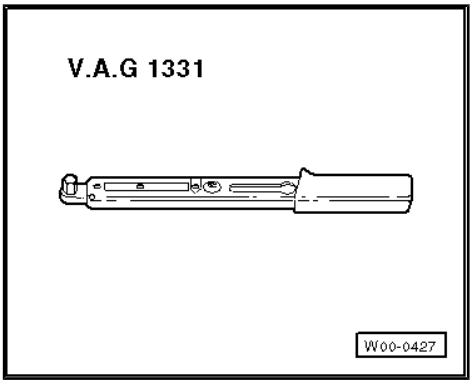

Note

A securely seated battery clamp ensures trouble free function and long service life of the battery.

Carry out following procedure:

– Press lugs -arrows- together and open cover sidewards.

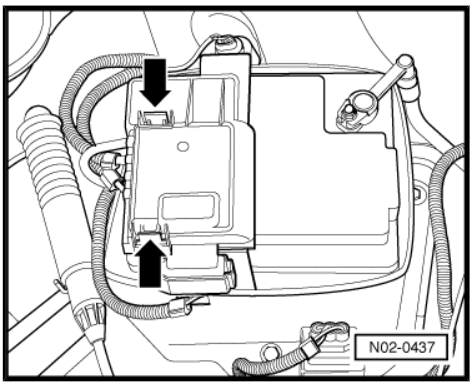

– Check whether battery clamps -3- and -4- are secure on battery terminals by moving battery positive cable -1- and battery negative cable -2- back and forth.

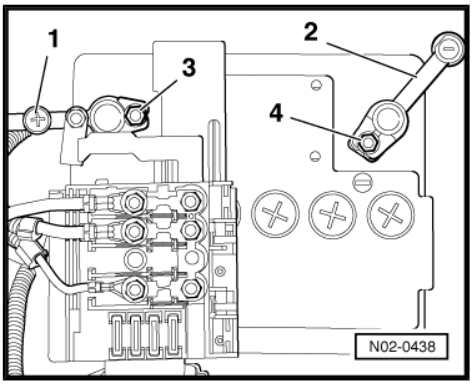

WARNING

If the battery clamp is not seated securely on the positive terminal, first disconnect battery clamp from battery negative terminal to prevent possible accidents.

If the battery clamp is not seated securely on positive terminal:

satelettronica

– Disconnect battery terminal clamp -4- from battery negative terminal first.
– Tighten battery clamp -3- on battery positive terminal to 5 Nm.
– Reconnect battery clamp -4- to battery negative terminal and tighten to 5 Nm.

If the battery clamp on negative terminal is not seated securely:

– Tighten battery clamp -4- on battery negative terminal to 5 Nm.

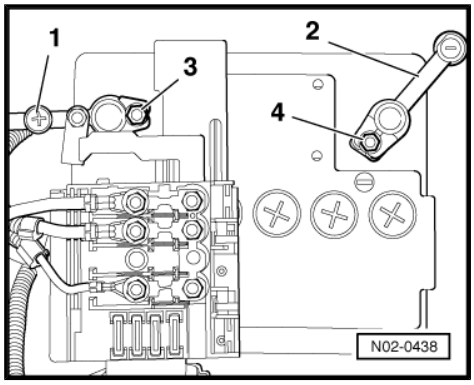

4.5 Tyres: checking condition, wear pattern, inflation pressure, tread depth

Checking condition of tyre ⇒ page 28 .

Checking wear pattern ⇒ page 29

Tread depth (including spare wheel): check ⇒ page 29 .

General notes ⇒ page 29

Tyre pressure: Check, correct inflation pressure if necessary ⇒ page 30 .

Special tools and workshop equipment required

♦ Tyre inflator - VAS 5216-

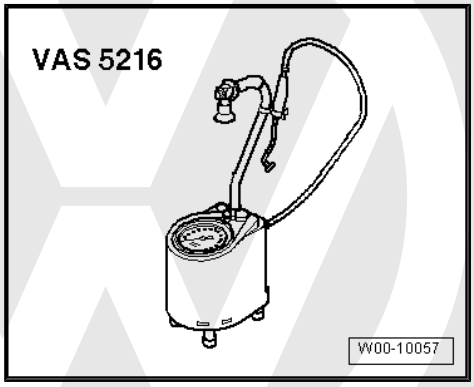

4.5.1 Tyres: checking condition

WARNING

If damage is determined, always check to see if a new tyre should be fitted.

Tests at delivery inspection

– Check tyre treads and side walls for damage and remove foreign bodies such as, for example, nails or glass splinters.

Tests at inspection service

– Check tyre treads and side walls for damage and remove foreign bodies such as, for example, nails or glass splinters.
– Check tyres for cupping, one-sided wear, porous side walls, cuts and punctures.

Protected by copyright. Copying for private or commercial purposes, in part or in whole, is not permitted unless authorised by Volkswagen AG. Volkswagen AG does not guarantee or accept any liability with respect to the correctness of information in this document. Copyright by Volkswagen AG.
satelettronica

4.5.2 Wear pattern: checking

The wear pattern on the front tyres will indicate, for example, if toe and camber settings should be checked:

- Feathering on tread indicates incorrect toe setting.
- One-sided tread wear is mainly attributed to incorrect camber.

When wear of this nature is detected, determine cause by checking alignment (repair measure).

4.5.3 Tyre tread depth: checking and entering

– Check tyre tread depth.

Minimum tread depth: 1.6 mm

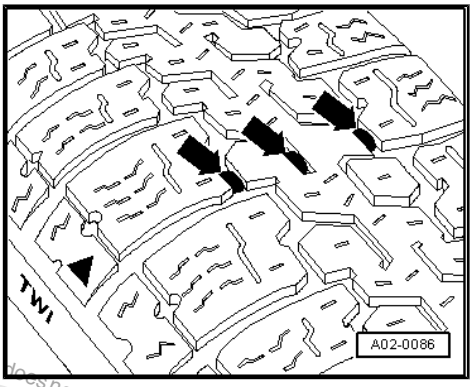

Note

- *This figure may vary according to legislation in individual countries.*
- *The minimum tread depth is reached when the tyres have worn down level with the 1.6 mm high tread wear indicators -arrows- positioned at intervals around the tyre.*
- *If the tread depth is approaching the minimum allowed depth, inform the customer.*

4.5.4 General information

WARNING

- ***For safety reasons, only tyres of same type and tread pattern should be fitted on a vehicle!***
- ***On four-wheel drive vehicles, tyres of the same type and tread pattern must be used. Otherwise the centre differential may be damaged.***

Note

- *"Checking tyre pressure" applies also to the spare wheel if a spare wheel with standard tyres or a temporary spare wheel is fitted.*
- *The tyre pressure table is valid for standard tyres for all tyre sizes fitted at the factory.*
- *The pressures in the table apply to cold tyres. Do not reduce increased pressures of warm tyres.*
- *Tyre pressures for the relevant model can also be found on a sticker attached to the inside of fuel tank flap.*
- *Adjust the tyre pressure to suit the vehicle load.*
- *The spare wheel should have the highest tyre pressure determined for the vehicle.*
- *Commercial vehicles predominantly drive with a tyre pressure at full load.*
- *The tyre pressures indicated are valid when towing a trailer up to a speed of 130 km/h.*

Protected by copyright. Copyright by Volkswagen AG.
Copyright by Volkswagen AG. Volkswagen AG does not guarantee or accept any liability with respect to the correctness of information in this document.
Copying for private or commercial purposes, in part or in whole, is not permitted unless authorised by Volkswagen AG.
satelettronica

M+S tyres

Note

- *Important information on winter tyres recommended by Volkswagen can be found in ⇒ ElsaWin; Technical information; Guidelines Wheels, Tyres .*
- *For winter tyres the tyre pressure must be increased to 0.2 bar.*

Explanation for speed indexes used in the table:

- Q. up to 160 km/h
- T: up to 190 km/h
- H: up to 210 km/h
- W: up to 270 km/h
- Y: up to 300 km/h

4.5.5 Tyre pressure: checking, correcting inflation pressure if necessary

Inflation pressures (for all factory fitted tyre sizes):

Tyre pressure table

	Half load		Full load	
	Front	Rear	Front	Rear
Vehicles with petrol engine:				
1.0l, 33/37 kW ► 09.99 with tyres				
155/70 R 13	2.1	2.1	2.4	2.9
175/65 R 13	1.9	1.9	2.1	2.4
185/55 R 14	1.9	1.9	2.1	2.4
195/45 R 15	1.9	1.9	2.1	2.4
1.0l/37 kW 09.99 ► with tyres				
155/70 R 13	2.0	2.0	2.3	2.8
175/65 R 13	2.1	2.1	2.2	2.5
185/55 R 14	1.9	1.9	2.2	2.5
195/45 R 15	1.9	1.9	2.2	2.5
1.3l/40kW 1.4l/40-/44-kW ► 09.99 with tyres				
155/70 R 13	2.2	2.2	2.5	3.0
175/65 R 13	2.1	2.1	2.3	2.6
185/55 R 14	2.1	2.1	2.3	2.6
195/45 R 15	2.1	2.2	2.3	2.6
1.4l, 40/44 kW 10.99 ► with tyres				
175/65 R 13	2.0	1.9	2.2	2.5
185/55 R 14	2.2	2.0	2.4	2.8
195/45 R 15	2.2	2.0	2.4	2.8
1.4l/1.6l, 55 kW ► 09.99 with tyres				
175/65 R 13	2.1	2.1	2.3	2.6
185/55 R 14	2.1	2.1	2.3	2.6
195/45 R 15	2.1	2.1	2.3	2.6
1.4l/1.6l, 55 kW 10.99 ► with tyres				
175/65 R 13	2.1	1.9	2.3	2.6

Protected by copyright. Copying for private or commercial purposes, in part or in whole, is not permitted unless authorised by Volkswagen AG. Volkswagen AG does not guarantee or accept any liability with respect to the correctness of information in this document. Copyright by Volkswagen AG.
satelettronica

	Half load		Full load	
	Front	Rear	Front	Rear
185/55 R 14	2.3	2.1	2.5	2.8
195/45 R 15	2.3	2.1	2.5	2.8
1.4l/74 kW ► 09.99 with tyres				
185/55 R 14	2.3	2.1	2.5	2.8
195/45 R 15	2.3	2.1	2.5	2.8
1.4l/74 kW 10.99 ► with tyres				
185/55 R 14	2.3	2.1	2.5	2.8
195/45 R 15	2.3	2.1	2.5	2.8
1.6l/88 kW ► 09.99 with tyres				
185/55 R 14	2.6	2.4	2.8	3.0
195/45 R 15	2.6	2.4	2.8	3.0
1.6l, 88/92 kW 10.99 ► with tyres				
185/55 R 14	2.6	2.4	2.8	3.0
195/45 R 15	2.6	2.4	2.8	3.0

	Half load		Full load	
	Front	Rear	Front	Rear
Vehicles with diesel engine:				
42/44/47 kW ► 09.99 (not postal vehicles) with tyres				
175/65 R 13	2.1	2.1	2.3	2.6
185/55 R 14	2.1	2.1	2.3	2.6
195/45 R 15	2.1	2.1	2.3	2.6
42/44/47 kW ► 09.99 (postal vehicles) with tyres				
155/70 R 13	2.4	2.4	2.5	2.8
175/65 R 13	2.1	2.1	2.3	2.6
185/55 R 14	2.1	2.1	2.3	2.6
1.7l/42 kW 10.99 ► with tyres				
175/65 R 13	2.1	1.9	2.3	2.6
185/55 R 14	2.3	2.1	2.4	2.8
195/45 R 15	2.3	2.1	2.4	2.8
1.9l/47 kW 10.99 ► with tyres				
175/65 R 13	2.2	2.0	2.3	2.6
185/55 R 14	2.3	2.1	2.4	2.8
195/45 R 15	2.3	2.1	2.4	2.8
1.4l/55 kW 10.99 ► with tyres				
175/65 R 13	2.2	2.0	2.4	2.7
185/55 R 14	2.4	2.2	2.6	2.9
195/45 R 15	2.4	2.2	2.6	2.9
Spare wheel (all engine types)				
Temp. spare standard wheel	4.2 Keep to the highest pressure required for the vehicle.			

Protected by copyright. Copying for private or commercial purposes, in part or in whole, is not permitted unless authorised by Volkswagen AG. Volkswagen AG does not guarantee or accept any liability with respect to the correctness of information in this document. Copyright by Volkswagen AG.

satelettronica

Spare wheel with standard tyres

The spare wheel should have the highest tyre pressure determined for the vehicle.

4.6 Brake system: inspecting for leaks and damage

Check following components for leaks and damage:

- ♦ Brake master cylinder
- ♦ Brake servo (for anti-lock brake system: hydraulic unit)
- ♦ Brake pressure regulator and
- ♦ Brake caliper

– Ensure that brake hoses are not twisted.

– Additionally ensure that brake hoses do not touch any vehicle components when steering is at full lock.

– Check brake hoses are not porous or brittle.

– Check brake hoses and lines for chafing.

– Check brake connections and fastenings for correct seating, leaks and corrosion.

> ⚠ **WARNING**
>
> ***Faults found must always be rectified (repair measure).***

4.7 Front and rear brake pads/linings: checking thickness

Special tools and workshop equipment required

- ♦ Pliers - 3314-

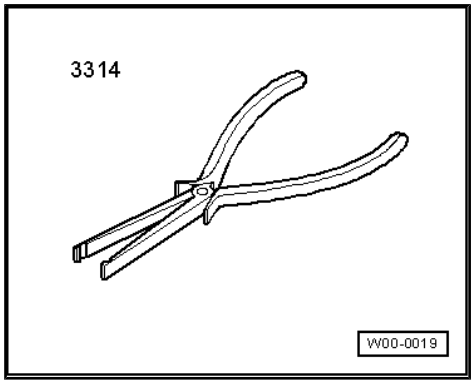

- ♦ Torque wrench - V.A.G 1332-

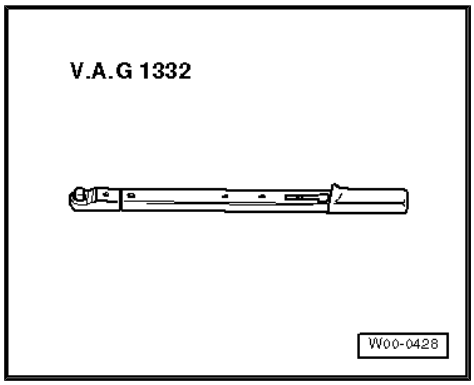

Protected by copyright. Copying for private or commercial purposes, in part or in whole, is not permitted unless authorised by Volkswagen AG. Volkswagen AG does not guarantee or accept any liability with respect to the correctness of information in this document. Copyright by Volkswagen AG.
satelettronica

- Electric hand torch

Carry out following procedure:

4.7.1 Front brake pads:

Note

- *Experience has shown that brake pad wear due to roadside debris is slightly more on passenger side than on driver side. It is therefore better to remove the passenger side front wheel to determine the remaining pad thickness.*
- *The adapter to loosen and tighten the anti-theft wheel bolts can be found in the vehicle tool kit. Please ask the customer if the adapter is not available.*

– For better evaluation of remaining pad thickness remove the front wheel on the passenger side.

– Mark position of wheel relative to brake disc.

– If necessary, pull off wheel bolt covers using pliers - 3314- .

– Unbolt wheel bolts and remove wheel.

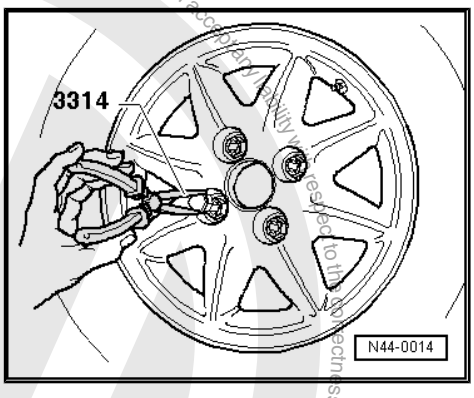

– Measure thickness of inner and outer pads.

a - Brake pad thickness without backplate

- Wear dimension: 2 mm

The brake pads have reached their wear limit at a pad thickness of 2 mm (without backplate) and must be renewed (repair measure). Inform customer!

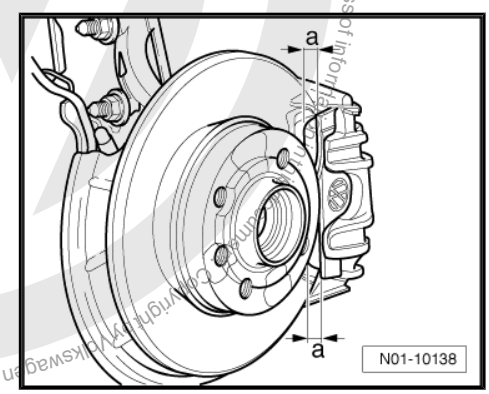

– Install wheel in marked position.

– Tighten wheel bolts diagonally and alternately to following specified torque:

Specified torque: 110 Nm

– Reinstall wheel bolt covers if necessary.

4.7.2 Rear drum brake pads:

Rear brake pads ⇒ page 34 .

Protected by copyright. Copying for private or commercial purposes, in part or in whole, is not permitted unless authorised by Volkswagen AG. Volkswagen AG does not guarantee or accept any liability with respect to the correctness of information.
Copyright by Volkswagen AG.
satelettronica

– Check thickness of brake pads through the hole -arrow B- and inspection hole in backplate -arrow A- (with a torch).

- Wear limit: 2.5 mm (pad thickness only)

At a pad thickness of 2.5 mm the brake pads have reached their wear limit and must be renewed (repair measure). Inform customer!

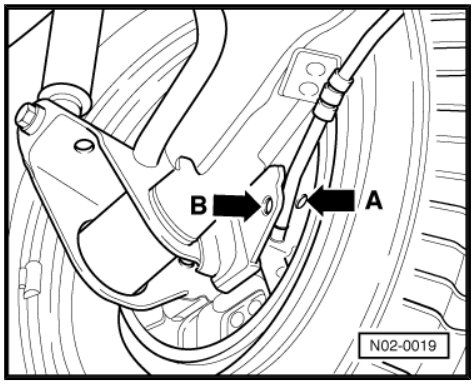

Note

Check pads for brake fluid or grease contamination.

4.7.3 Rear brake pads:

– Illuminate area behind hole in wheel using an electric hand torch.

– Inspect outer pad to determine thickness.

– Illuminate inner pad with an electric hand torch and mirror.

– Inspect inner pad to determine thickness.

a - Inner and outer pad thickness without backplate

- Wear dimension: 2 mm

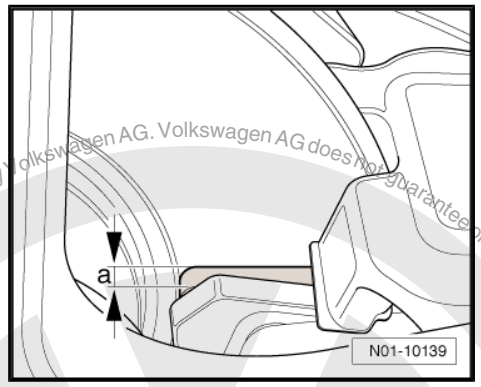

The brake pads have reached their wear limit at a pad thickness of 2 mm (without backplate) and must be renewed (repair measure). Inform customer!

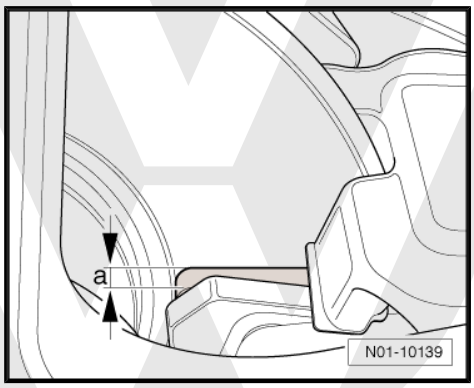

4.8 Brake system: changing brake fluid

Instructions for use and safety ⇒ page 34 .

Brake fluid specification ⇒ page 35 .

Procedure for changing brake fluid ⇒ page 35 .

4.8.1 Operation and safety notes

Note

- *From model year 2006 a new brake fluid is used.*
- *The new brake fluid can also be used for older vehicles.*
- *For this purpose it can be mixed with the previous brake fluid.*

Protected by copyright. Copying for private or commercial purposes, in part or in whole, is not permitted unless authorised by Volkswagen AG. Volkswagen AG does not guarantee or accept any liability with respect to the correctness of information in this document. Copyright by Volkswagen AG.
satelettronica

WARNING

- *Never allow brake fluid to come into contact with fluids that contain mineral oils (e.g. oil, petrol, cleaning agents). Mineral oils damage the seals and boots in the brake system.*
- *Brake fluid is poisonous. In addition, due to its corrosive nature, it must not come into contact with paint.*
- *Brake fluid is hygroscopic, which means it absorbs moisture from the ambient air and should therefore always be stored in air-tight containers.*
- *Rinse off spilled brake fluid using plenty of water.*
- *Do not reuse drained (used) brake fluid.*
- *Observe relevant disposal regulations.*

Carry out following procedure:

4.8.2 Brake fluid specification

Permissible brake fluid specifications:

- Brake fluid conforming to US standard FMVSS 116 DOT 4 (previous brake fluid)
- Brake fluid conforming to VW standard, VW 501 14 (new brake fluid).

4.8.3 Procedure, changing brake fluid

Special tools and workshop equipment required

- Brake pedal depressor - V.A.G 1869/2-

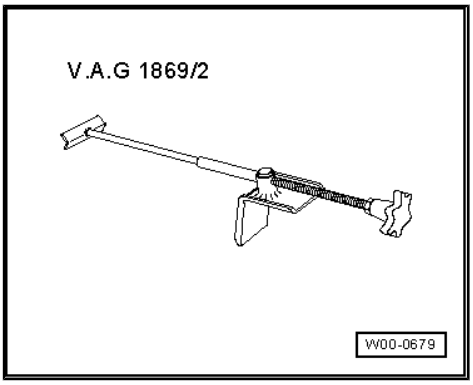

- Brake filling and bleeding unit - VAS 5234-

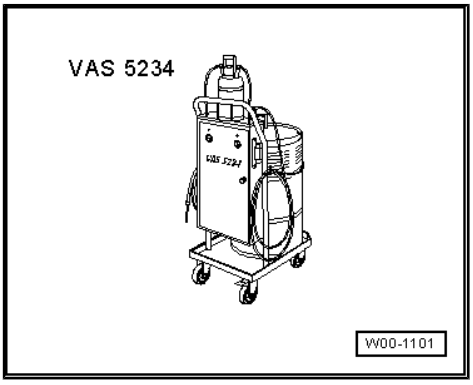

⇒ Note operating instructions for brake filling and bleeding unit - VAS 5234- !

– Unbolt cap from brake fluid reservoir.

Protected by copyright. Copyright for private or commercial purposes, in part or in whole, is not permitted unless authorised by Volkswagen AG. Volkswagen AG does not guarantee or accept any liability with respect to the correctness of information in this document. Copyright by Volkswagen AG.
satelettronica

– Extract as much brake fluid as possible using suction hose -1- from brake filling and bleeding unit - VAS 5234- or using a suction bottle with built-in strainer.

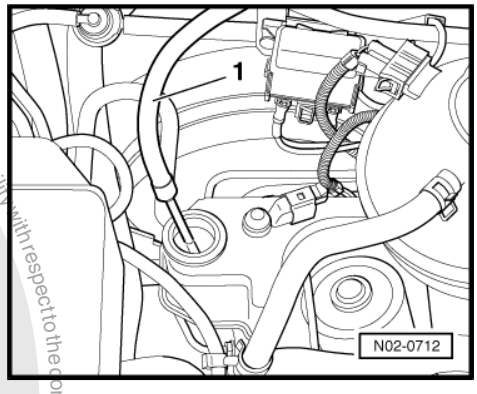

> ⚠ **WARNING**
>
> ***Do not reuse drained (used) brake fluid.***

– Fit brake pedal actuator - V.A.G 1869/2- between driver seat and brake pedal and pretension.

– Connect adapter -1- on brake fluid reservoir.

– Connect filling hose from brake filling and bleeding equipment - VAS 5234- to adapter.

– Remove caps from bleeder screws.

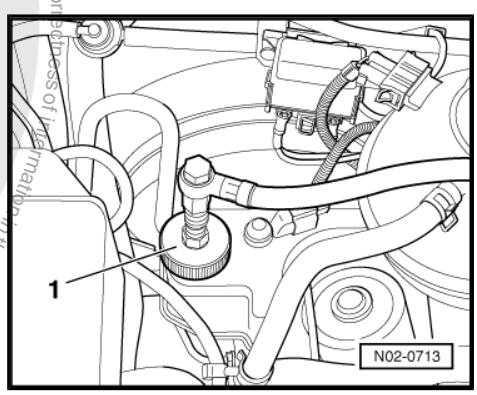

– Push collector bottle bleed hose -1- onto rear bleeder screw [7], open bleeder screw and let appropriate quantity of brake fluid (see following table) run out. Close bleed screw.

7) Start at rear right of left-hand drive vehicles and at rear left of right-hand drive vehicles.

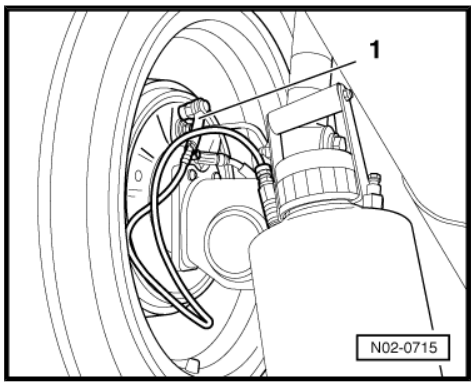

Repeat procedure on other side of vehicle at rear.

satelettronica

Protected by copyright. Copyright by Volkswagen AG. Volkswagen AG does not guarantee or accept any liability with respect to the correctness of information in this document. Copyright by Volkswagen AG. Reproduction, in whole or in part, is only permitted for commercial purposes unless authorised by Volkswagen AG.

– Push collector bottle bleeder hose -1- onto front bleeder screw [8], open bleeder screw and let appropriate quantity of brake fluid (see table) run out. Close bleed screw.

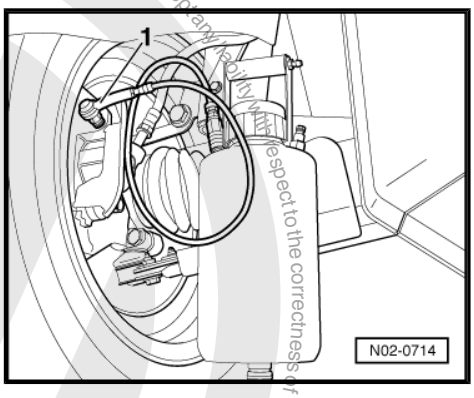

8) Start at front right of left-hand drive vehicles and at front left of right-hand drive vehicles.

Repeat procedure on other side of vehicle at front.

Sequence: Wheel brake cylinders, brake calipers	Brake fluid quantity which must flow out of wheel brake cylinders or brake calipers:
Rear right	0.5 litre
Rear left	0.5 litre
Front right	0.5 litre
Front left	0.5 litre

Total quantity: approx. 2 litre

– Fit cover caps on bleeder screws.
– Set fill lever of brake filling and bleeding unit - VAS 5234- to position -B- (see operating instructions).
– Take filler hose off adapter.
– Unscrew adapter from brake fluid reservoir.
– Screw in cap of brake fluid reservoir.
– Remove brake pedal depressor.
– Check pedal pressure and brake pedal free play. Free play: max. $^{1}/_{3}$ of pedal travel.

4.9 Brake fluid level: checking

Instructions for use and safety ⇒ page 34 .

Brake fluid specification ⇒ page 35 .

Procedure, brake fluid level: checking ⇒ page 37 .

4.9.1 Procedure, brake fluid level: checking

Brake fluid level at delivery inspection:

At delivery inspection the fluid level must be at MAX. marking -1-.

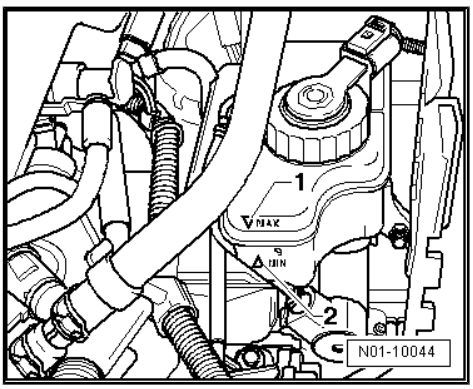

Note

To prevent that brake fluid flows out of reservoir, the MAX marking must not be exceeded.

Brake fluid level at inspection service:

The fluid level must always be judged in conjunction with lining/pad wear.

When vehicle is in use, fluid level tends to drop slightly due to lining/pad wear and automatic adjustment.

- Recommended brake fluid level, if brake pads are almost at wear limit:

satelettronica

“At MIN. marking or just above” “REPLENISHING IS NOT REQUIRED”.

- Recommended brake fluid level when brake pads are new or well within wear limit:

“Between MIN and MAX marking”.

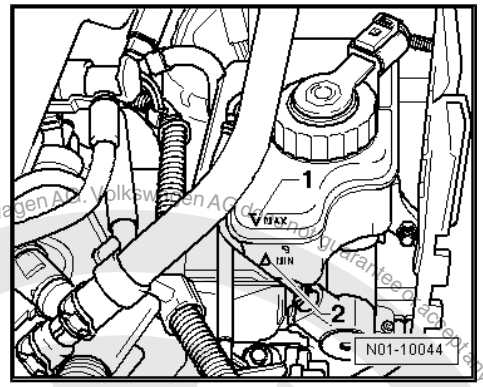

WARNING

If the fluid level is below MIN. marking, the brake system must be checked before fluid is topped up “repair measure”.

4.10 Electric windows: initialising (activation)

4.10.1 Electric windows: initialising

Note

The automatic opening and closing features for the electric windows do not function after disconnecting and reconnecting the vehicle battery. The electric windows must be initialised before a new vehicle is delivered. The vehicle battery must not be disconnected after initialisation.

WARNING

After vehicle battery has been disconnected and reconnected the roll-back function of the electric window regulators is disabled. Severe pinching injuries could result!

Carry out the following procedure to initialise the electric windows:

– Close all doors and windows completely.

– Lock vehicle from outside at driver door or front passenger door.

– Unlock vehicle.

– Lock vehicle again from outside at driver door or front passenger door. Hold key in lock position for at least 1 second.

4.11 Vehicle system test: carrying out test

– Connect vehicle diagnostic tester ⇒ page 20 .

– Switch on ignition

– Select operating mode “Guided fault finding” on display.

– Then perform vehicle identification on tester.

The programme now automatically performs a vehicle system test and reads all control units available for this vehicle type.

– Press [>] button.

Now all faults are listed.

Protected by copyright. Copyright by Volkswagen AG. Copying for private or commercial purposes, in part or in whole, is not permitted unless authorised by Volkswagen AG. Volkswagen AG does not guarantee or assume any liability with respect to the correctness of information in this document.
satelettronica

Note

- *At this point it is useful to change to operating mode guided functions to carry out further operations with diagnostic tester and to prevent a second vehicle identification on tester.*
- *To do this, press button operating mode and then guided functions.*
- *For further procedure see respective work descriptions.*
- *To return to guided fault finding, press button operating mode and then guided fault finding.*

Caution

The vehicle must always be delivered to the customer with fault memory cleared.

Static faults

If one or more static faults are found in the fault memory, we recommend in agreement with the customer to rectify these faults using guided fault finding.

Sporadic faults

If only sporadic faults or notes are stored in the fault memory and the customer has no complaints in conjunction with the electronic vehicle system, clear fault memory.

– Press [>] button again to reach the test plan.
– Now close Guided Fault Finding using GoTo button and then End.

All fault memories are read again.

Then the diagnosis log is sent “online” or stored on the tester.

Note

- *If the tester is not connected to the network, the diagnosis log is stored and will be sent when the tester is connected to the network.*
- *Logs stored and which are more than 40 days old will be cleared automatically.*

The vehicle system test is completed.

4.12 Folding fabric sunroof: cleaning and lubricating guide rails

Carry out following procedure:

Published by Volkswagen AG. Volkswagen AG does not guarantee or accept any liability with respect to the correctness of information in this document. Copyright by Volkswagen AG. Copying for private, commercial purposes, in part or in whole, is not permitted unless authorised by Volkswagen AG.
satelettronica

– Clean guide rail -arrows- and lubricate with special grease - G 000 450 02- .
– Check function of folding fabric sunroof.

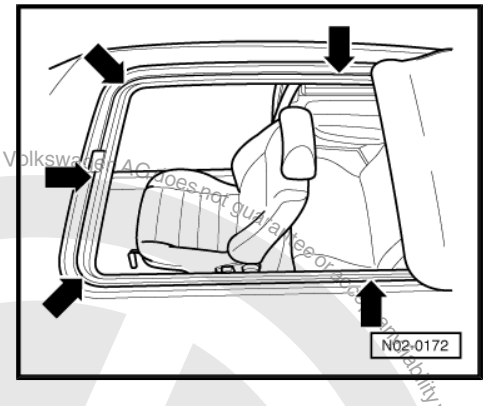

4.13 Boots: inspecting

Carry out following procedure:

– Check outer joint protective boots -arrow- and inner joint protective boots (not shown in illustration) for leaks and damage.

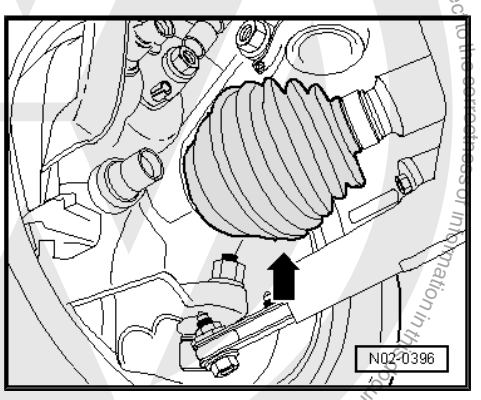

4.14 Checking first aid box expiry date

With immediate effect, the expiry date of the first aid box must be checked at every inspection service.

Inform customer if date has been exceeded.

4.15 Poly V-belt: checking condition, tensioning if necessary

Poly V-belt: checking condition ⇒ page 40 .

Poly V-belt: Tension (engines without automatic tensioning roller) ⇒ page 41

4.15.1 Poly V-belt: checking condition

Carry out following procedure:

– Raise vehicle.

Protected by copyright. Copying for private or commercial purposes, in part or in whole, is not permitted unless authorised by Volkswagen AG. Volkswagen AG does not guarantee or accept any liability with respect to the correctness of information in this document. Copyright by Volkswagen AG.
satelettronica

– Crank engine at vibration damper/belt pulley -2- using a socket.

– Check poly V-belt -1- from below for:

- ♦ Sub-surface cracks (cracks, core ruptures, cross sectional breaks)
- ♦ Layer separation (top layer, cord strands)
- ♦ Base break-up
- ♦ Frayed cord strands
- ♦ Flank wear (material wear, frayed flanks, flank brittleness - glassy flanks-, surface cracks)
- ♦ Traces of oil and grease

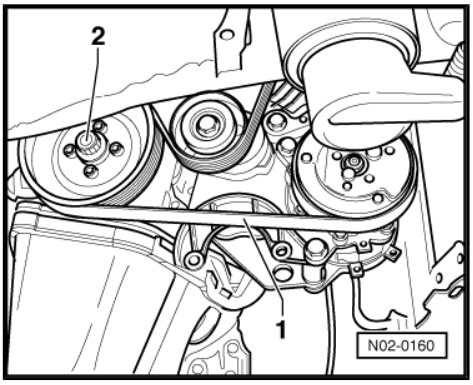

Note

If faults are found, it is essential for the poly V-belt to be renewed. This can avoid breakdowns and malfunctions. The replacement of a poly V-belt is a repair measure.

4.15.2 Poly V-belt: tensioning (engines without automatic tensioning roller)

Special tools and workshop equipment required

- ♦ Torque wrench - V.A.G 1331-

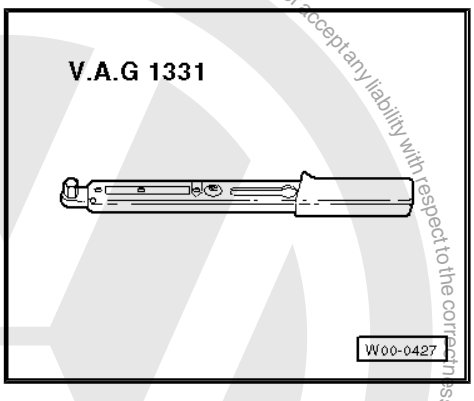

- ♦ Tensioning arm - 3297-

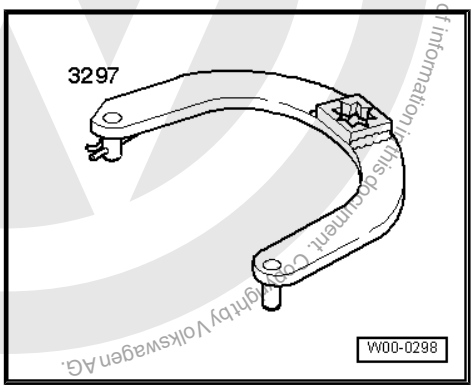

Carry out following procedure:

Protected by copyright. Copying for private or commercial purposes, in part or in whole, is not permitted unless authorised by Volkswagen AG. Volkswagen AG does not guarantee or accept any liability with respect to the correctness of information in this document. Copyright by Volkswagen AG.
satelettronica

– Unbolt alternator securing bolts -1- and -2- at least one turn.

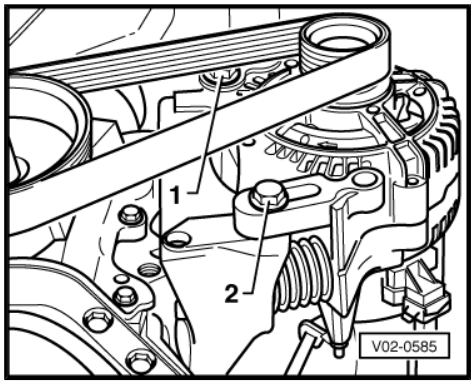

– Press alternator down using tensioning lever - 3297- to stop at least three times to ensure optimum ease of movement.
– Run engine at idling speed at least for 10 seconds with alternator loose.

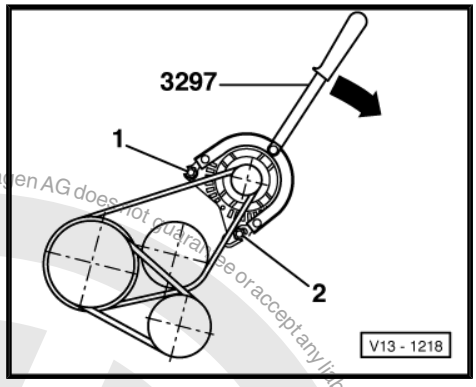

Note

Observe tightening sequence when tightening the alternator bolts, do not lean on alternator and do not touch the poly V-belt.

– First tighten securing bolt -2-, then tighten securing bolt -1- to 25 Nm.

4.16 Fuel filter: renewing

- Fuel filter: Renew, PD TDI diesel engines ⇒ page 42
- Fuel filter: Renew, SD SDI diesel engines ⇒ page 43

4.16.1 Fuel filter: renewing, PD TDI diesel engines

Removing

Note

- *Ensure that no diesel fuel contacts coolant hoses. If necessary, clean hoses immediately.*
- *Please observe disposal instructions!*

Carry out following procedure:

– Pull off retaining clip -1- and remove regulating valve -2- with fuel lines connected.
– Pull off fuel hoses -3- and -4-.
– Remove bolt -5- and cap nuts -6- and pull filter slightly upwards.
– Loosen cross head bolt on clamp and take out filter upwards.

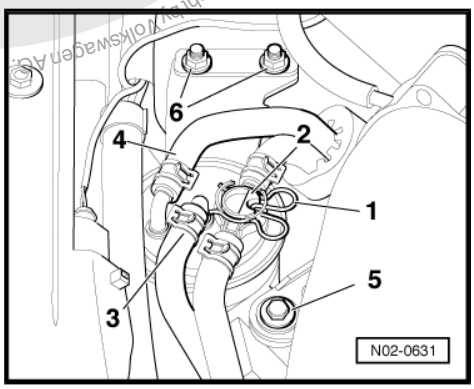

Protected by copyright. Copying for private or commercial purposes, in part or in whole, is not permitted unless authorised by Volkswagen AG. Volkswagen AG does not guarantee or accept any liability with respect to the correctness of information in this document. Copyright by Volkswagen AG.
satelettronica

Installing

– Fill new filter with clean Diesel. This allows the engine to start quicker.

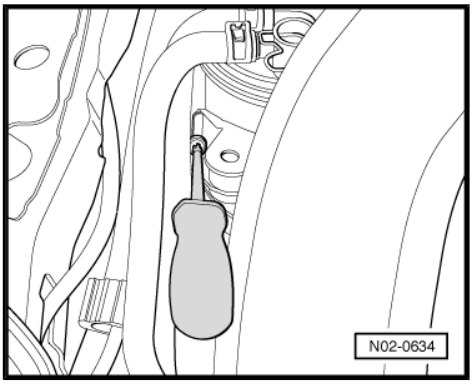

– Insert filter and tighten cross head bolt on clamp.
– Fit new O-ring to seal regulating valve.

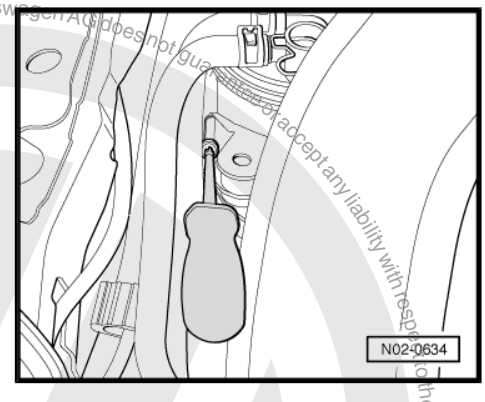

Note

Fuel flow direction is marked by arrows (do not interchange connections).

– Install regulating valve -2- and fit retaining clip -1-.
– Push fuel hoses -3- and -4- over hose connections and secure hoses with hose clips.
– Tighten bolt -5- and cap nuts -6-.
– Start engine and check fuel system for leaks (visual check).
– Operate throttle several times to bleed fuel system.

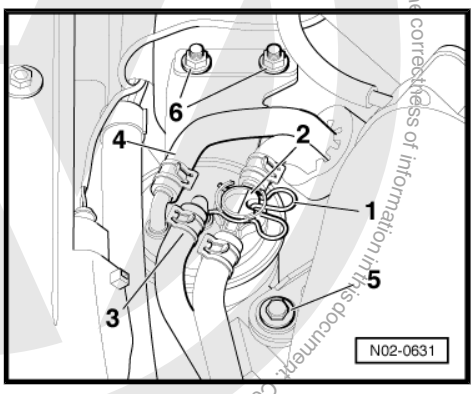

4.16.2 Fuel filter: renewing, SD SDI diesel engines

Removing

Note

- *Ensure that no diesel fuel contacts coolant hoses. If necessary, clean hoses immediately.*
- *Please observe disposal instructions!*

Carry out following procedure:

Protected by copyright. Copying for private or commercial purposes, in part or in whole, is not permitted unless authorised by Volkswagen AG. Volkswagen AG does not guarantee or accept any liability with respect to the correctness of information in this document. Copyright by Volkswagen AG.
satelettronica

– Pull off retaining clip -1- and remove regulating valve -2- with fuel lines connected.

– Pull off fuel hoses -3- and -4-.

– Loosen cross head bolt -5- on clamp and take out filter upwards.

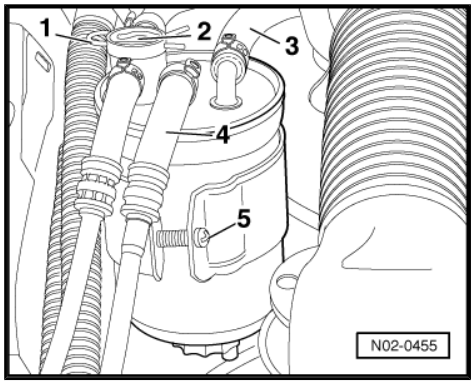

Installing

– Fit new O-ring to seal regulating valve.

Note

Fuel flow direction is marked by arrows (do not interchange connections).

– Fill new filter with clean Diesel. This allows the engine to start quicker.

– Fit filter and secure by tightening the cross head bolt -5-.

– Install regulating valve -2- and fit retaining clip -1-.

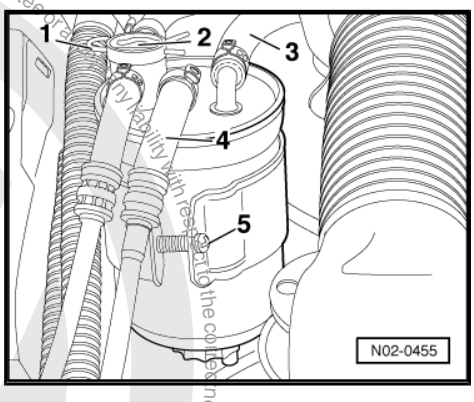

– Push fuel hoses -3- and -4- over hose connections and secure hoses with hose clips.

– Start engine and check fuel system for leaks (visual check).

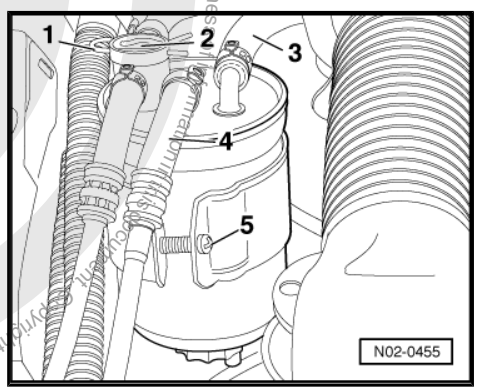

– Operate throttle several times. Then fuel must flow bubble-free through the transparent line -4- when engine is at idling speed.

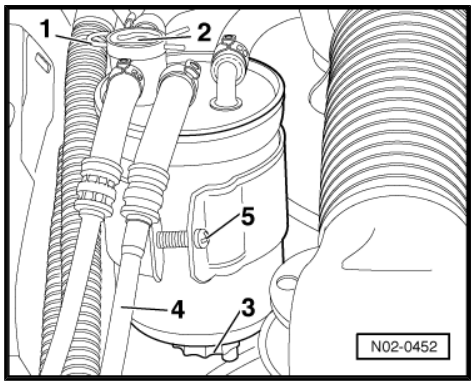

4.17 Fuel filter: draining water (diesel engine)

◆ Fuel filter: draining water, SD SDI diesel engines
⇒ page 45

Protected by copyright. Copying for private or commercial purposes, in part or in whole, is not permitted unless authorised by Volkswagen AG. Volkswagen AG does not guarantee or assume any liability with respect to the correctness of information. Copyright by Volkswagen AG.
satelettronica

- Fuel filter: draining water, PD TDI diesel engines
⇒ page 45

4.17.1 Fuel filter: draining water, SD SDI diesel engines

Note

- *Ensure that no diesel fuel contacts coolant hoses. If necessary, clean hoses immediately.*
- *Please observe disposal instructions!*

Carry out following procedure:

– Pull off retaining clip -1- and remove regulating valve -2- with fuel lines connected.

– Fit hose onto water drain screw connection -3-, open screw and drain approx. 0.1 l of fluid.

– Tighten water drain screw -3- and remove hose.

– Fit new O-ring to seal regulating valve.

– Install regulating valve -2- and fit retaining clip -1-.

– Check fuel system for leaks (visual check).

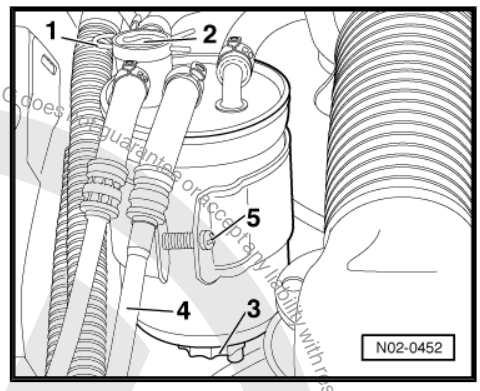

– Operate throttle several times. Then fuel must flow bubble-free through the transparent line -4- when engine is at idling speed.

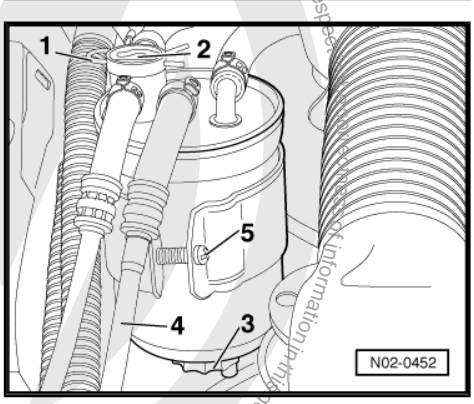

4.17.2 Fuel filter: draining water, PD TDI diesel engines

Note

- *Ensure that no diesel fuel contacts coolant hoses. If necessary, clean hoses immediately.*
- *Please observe disposal instructions!*

Carry out following procedure:

Protected by copyright. Copyright by Volkswagen AG.
Volkswagen AG does not guarantee or accept any liability with respect to the correctness of information in this document. Copyright by Volkswagen AG.
Copying for private or commercial purposes, in part or in whole, is not permitted unless authorised by Volkswagen AG.
satelettronica

– Pull off retaining clip -1- and remove regulating valve -2- with fuel lines connected.
– Remove bolt -3- and cap nuts -4- and pull filter slightly upwards.

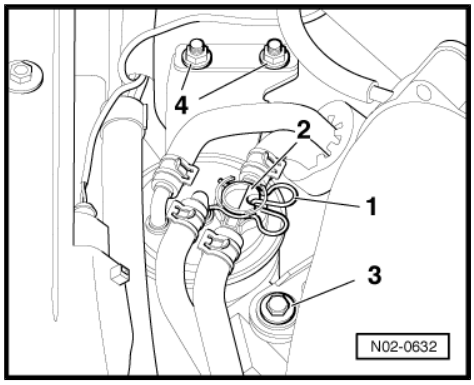

– Fit hose onto water drain screw connection -arrow-, open screw and drain approx. 0.1 l of fluid.
– Tighten water drain screw -arrow- and remove hose.

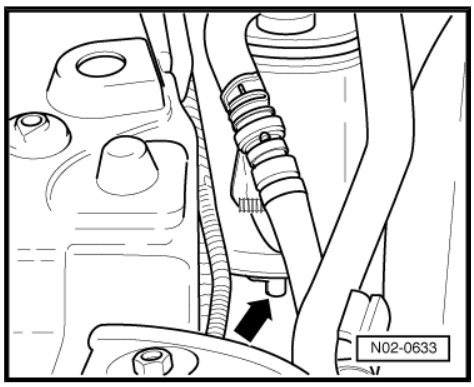

– Tighten bolt -3- and cap nuts -4-.
– Fit new O-ring to seal regulating valve.
– Install regulating valve -2- and fit retaining clip -1-.
– Start engine and check fuel system for leaks (visual check).
– Operate throttle several times to bleed fuel system.

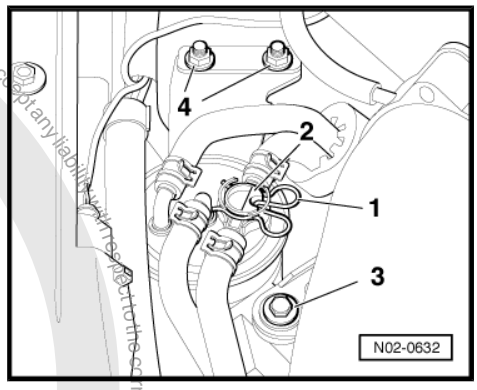

4.18 Cooling system: checking frost protection and coolant level

Checking frost protection ⇒ page 47

Check coolant level, replenish coolant if necessary ⇒ page 47

Protected by copyright. Copying for private or commercial purposes, in part or in whole, is not permitted unless authorised by Volkswagen AG. Volkswagen AG does not guarantee or accept any liability with respect to the correctness of information in this document. Copyright by Volkswagen AG.
satelettronica

4.18.1 Checking frost protection

Note

- *Because of its positive characteristics only coolant additive G 12 Plus according to TL VW 774 F should be used if possible. Identification: purple in colour.*
- *G 12 Plus can be mixed with previously used coolant additives G 12 red and G 11.*
- *G 12 Plus is suitable as a filled-for-life filling for cast iron and all-aluminium engines and gives optimum protection against frost, corrosion damage, scaling and overheating.*
- *G 12 Plus raises the boiling point to 135°C and ensures better heat dissipation. The coolant concentration must be at least 40% (frost protection up to - 25°C). It should not exceed 60% (frost protection up to - 40°C), otherwise frost protection will be reduced again and cooling effectiveness will also be reduced.*

Special tools and workshop equipment required

- Refractometer - T10007-

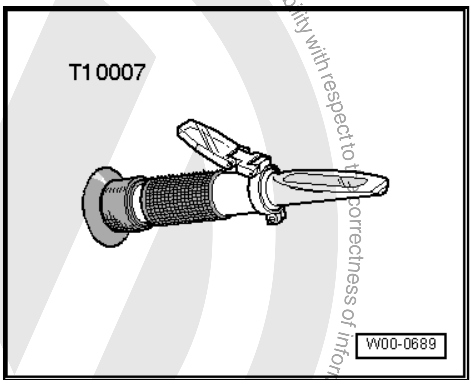

- or:
- Anti-freeze tester (commercially available)

– Check concentration of coolant additive using refractometer - T10007- (refer to operating instructions) or with a commercially available anti-freeze tester.

– If frost protection is insufficient, drain off the quantity indicated in frost protection table ⇒ page 48 and top-up with coolant additive.

4.18.2 Coolant level: checking, replenishing coolant if necessary

– Check coolant level on expansion tank with engine cold.

Protected by copyright. Copying for private or commercial purposes, in part or in whole, is not permitted unless authorised by Volkswagen AG. Volkswagen AG does not guarantee or accept any liability with respect to the correctness of information in this document. Copyright by Volkswagen AG.
satelettronica

- Delivery inspection: Coolant level at max. marking.
- Inspection service: Coolant level between max. and min. markings.

– If coolant is too low, add required amount according to mixture ratio.

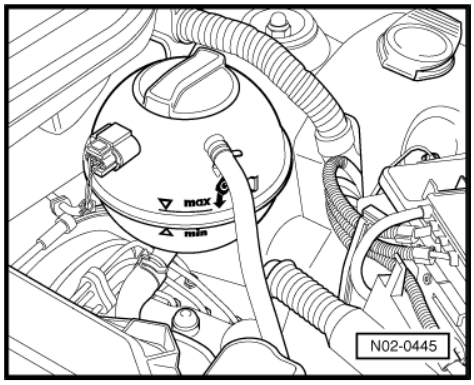

Note

If fluid loss is greater than can be expected through normal use, determine source and rectify (repair measure).

Mixing ratio:

Frost protection to	Coolant additive	Water
-25°C	approx. 40%	approx. 60%
-35°C	approx. 50%	approx. 50%
-40°C	approx. 60%	approx. 40%

Note

- *Coolant additives prevent frost and corrosion damage, scaling and also raise boiling point of coolant. For these reasons, the cooling system must be filled all-year-round with a frost and corrosion protection additive.*
- *Because of its high boiling point, the coolant improves engine reliability under heavy loads, particularly in countries with tropical climates.*
- *Do not reduce the coolant concentration by adding water even in warmer seasons and in warmer countries. The coolant additive concentration must be at least 40%.*

Frost protection table

Frost protection to °C		Quantity to drain
Actual value	Specified value	in litres
0	-25	3.0
	-35	3.5
-5	-25	2.5
	-35	3.5
-10	-25	2.0
	-35	3.0
-15	-25	1.5
	-35	2.5
-20	-25	1.0
	-35	2.5
-25	-35	2.0
-30	-35	1.0
-35	-40	0.5

Protected by copyright. Copying for private or commercial purposes, in part or in whole, is not permitted unless authorised by Volkswagen AG. Volkswagen AG does not guarantee or accept any liability with respect to the correctness of information in this document. Copyright by Volkswagen AG.
satelettronica

Note

Please observe disposal instructions!

– Check coolant additive concentration after road test again.

4.19 Idling speed: checking and adjusting if necessary

– »Diesel injection and glow plug system« ⇒ Diesel injection and glow plug system; Rep. gr. 23 ; Repairing fuel injection system, checking and adjusting idling speed, idling speed boost and rev limit »Repairing fuel injection system, checking and adjusting idling speed, idling speed boost and rev limit«

4.20 Air filter: cleaning housing and renewing filter element

- Air filter for Mono Motronic engines ⇒ page 49
- Air filter for 2-valve engines ⇒ page 50
- Air filter for 4-valve engines ⇒ page 51
- Air filter for 2-valve roller rocker finger engines ⇒ page 52
- Air filter for 4-valve roller rocker finger engines ⇒ page 54
- Air filter for SD, SDI diesel engines ⇒ page 55
- Air filter for PD diesel engines ⇒ page 56

Note

Information on type of injection system and valve timing for the vehicle can be obtained *⇒ page 1*

4.20.1 Air filter: cleaning housing and renewing filter element, Mono Motronic engines

Removing

– Open clips, lift air filter housing upper part and remove upwards.

– Take out used filter element.

Note

Please observe disposal instructions!

Installing

– Clean filter housing and install new filter element.

– Insert filter housing upper part and secure clips.

Protected by copyright. Copying for private or commercial purposes, in part or in whole, is not permitted unless authorised by Volkswagen AG. Volkswagen AG does not guarantee or accept any liability with respect to the correctness of information in this document. Copyright by Volkswagen AG.
satelettronica

4.20.2 Air filter: cleaning housing and renewing filter element, 2-valve engines

Removing

Note

- *The bolts must be loosened or tightened only by hand. When loosening or tightening the securing bolts it is only permitted to use a power screwdriver if:*
- *Speed of power screwdriver max. 200 rpm*
- *Specified torque: max. 3 Nm*

– Remove securing bolts -arrows-.

– Lift filter housing upper part and remove upwards.

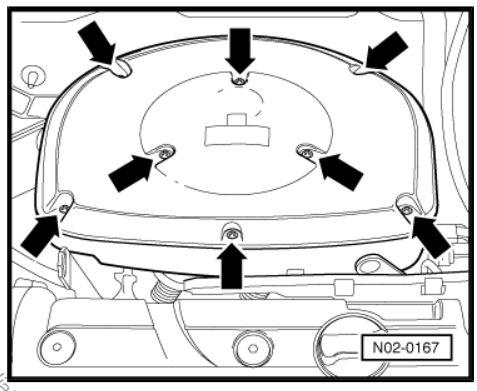

– Take out used filter element -arrow-.

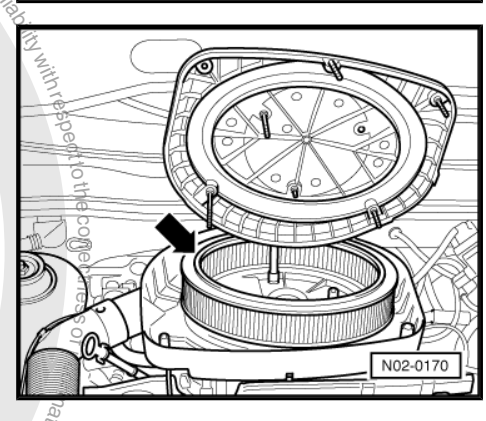

Note

Please observe disposal instructions!

Installing

– Clean filter housing and install new filter element.

– Insert filter housing upper part and tighten bolts -arrows-.

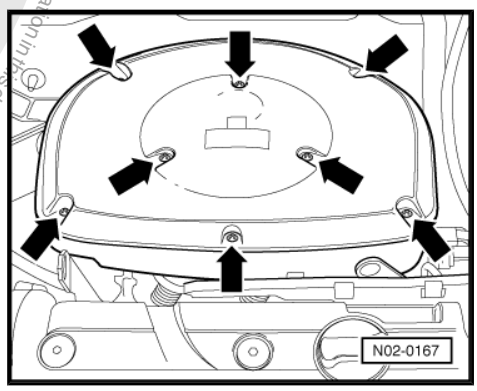

Protected by copyright. Copying for private or commercial purposes, in part or in whole, is not permitted unless authorised by Volkswagen AG. Volkswagen AG does not guarantee or accept any liability with respect to the correctness of information in this document. Copyright by Volkswagen AG.
satelettronica

4.20.3 Air filter: cleaning housing and renewing filter element, 4-valve engines

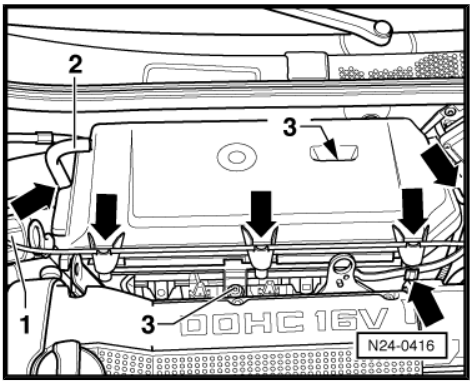

Removing

– First disconnect throttle cable and earth strap from mountings -arrows-.

– Then remove hoses -1- and -2-.

– Remove cross-head bolts -arrows-.

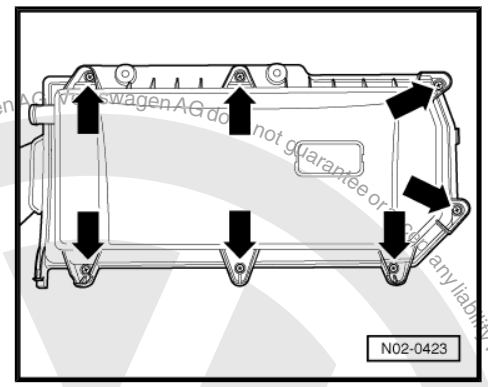

– Unscrew bolts -3- and pull air filter housing upper part off upwards.

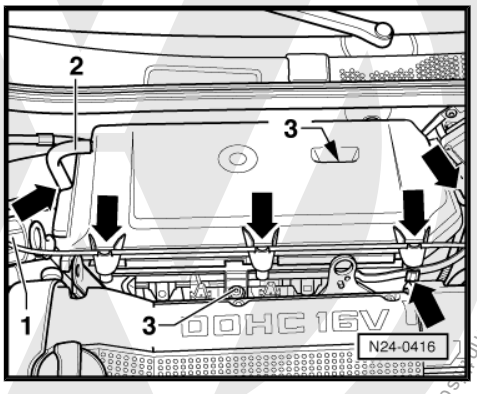

Protected by copyright. Copying for private or commercial purposes, in part or in whole, is not permitted unless authorised by Volkswagen AG. Volkswagen AG does not guarantee or accept any liability with respect to the correctness of information in this document. Copyright by Volkswagen AG.
satelettronica

– Take out used filter element -arrow-.

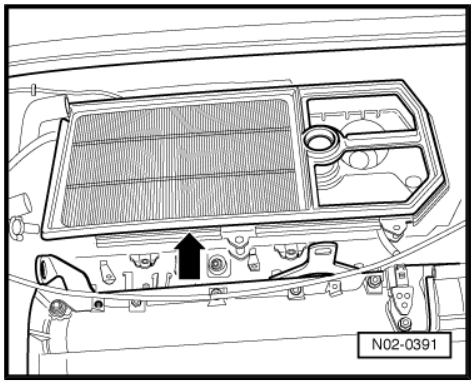

Note

Please observe disposal instructions!

Installing

– Clean filter housing and install new filter element.

Note

- *To secure the upper part of air filter to the lower part of air filter and to the intake connection, thread cutting screws are used as standard. When loosening or tightening these bolts using a power screwdriver, the thread in air filter housing upper part could be damaged.*
- *For this reason it is only permitted to use a power screwdriver, if the following prerequisites are fulfilled:*
- The speed of power screwdriver must be max. 200 rpm.
- Setting torque of max. 3 Nm must be adjustable.

– Screw in cross head bolts -arrows-.

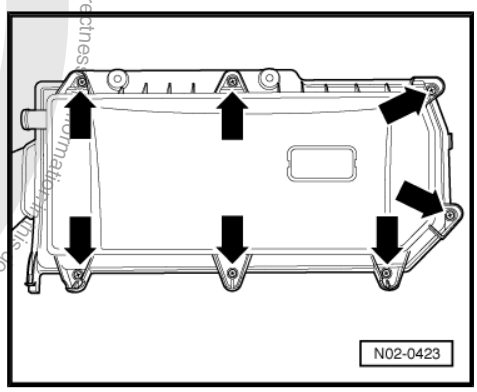

– Secure throttle cable and earth strap in mountings -arrows-.
– Then connect hoses -1- and -2-.
– Tighten bolts -arrows- to max. 3 Nm.

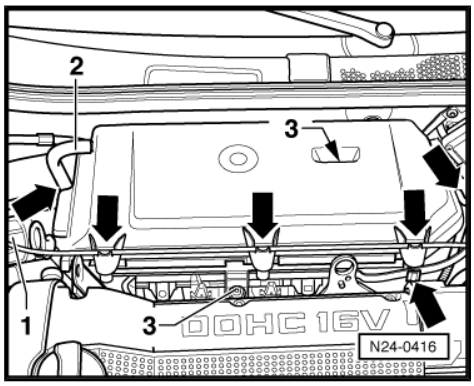

4.20.4 Air filter: cleaning housing and renewing filter element, 2-valve roller rocker finger engines

Special tools and workshop equipment required

satelettronica

- Pliers for spring-type clips - VAS 5024A-

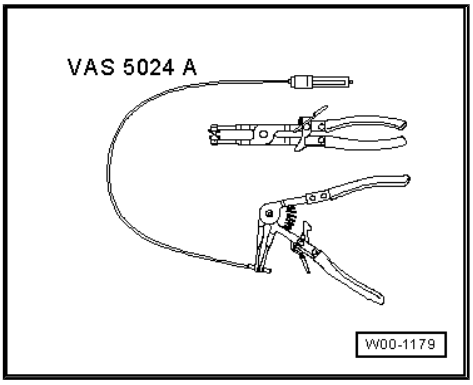

Removing

– Unclip caps -1- and remove bolts (below caps).

– Remove ignition cable -2- from air filter housing.

– Loosen hose clamp -3- using pliers for spring-type clips - VAS 5024A- and pull hose off.

– Pull crankcase breather hose -arrow- off air filter housing.

– Pull off exhaust gas recirculation hose on left side of air filter housing and remove filter housing.

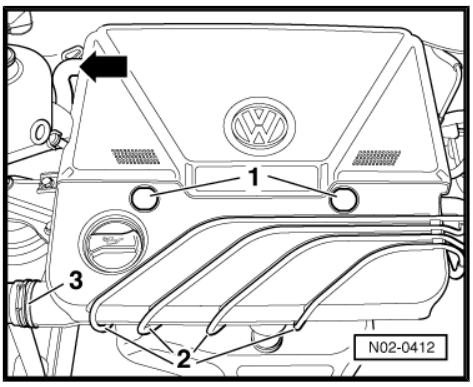

– Unscrew cross head bolts -1- and remove filter housing lower part.

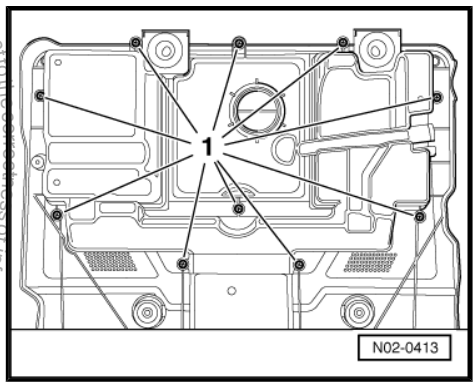

Note

- *The bolts must be loosened or tightened only by hand. When loosening or tightening the securing bolts it is only permitted to use a power screwdriver if:*
- *Speed of power screwdriver max. 200 rpm*
- *Specified torque: max. 3 Nm*

– Take out used filter elements -arrows-.

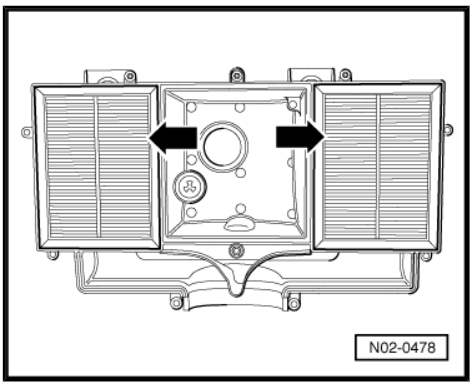

Note

Please observe disposal instructions!

Installing

– Clean filter housing and insert new filter elements.

Protected by copyright. Copyright by Volkswagen AG.
Copyright by Volkswagen AG. Volkswagen AG does not guarantee or accept any liability with respect to the correctness of information in this document.
This document is authorised for commercial purposes, in part or in whole, is not permitted.
satelettronica

– Insert filter housing lower part and tighten cross head bolts -1-.

Install air filter in reverse order.

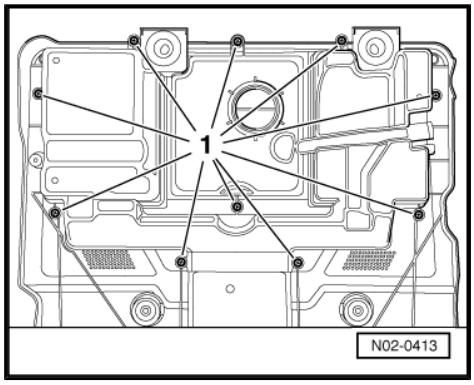

– Insert spacer sleeves -3- in upper part of air filter.
– Tighten securing bolts -2- to 10 Nm.

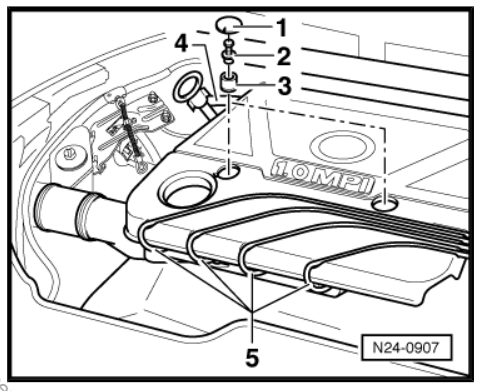

Note

For maintenance operation "Renewing spark plugs" the air filter housing must remain removed if necessary.

Protected by copyright. Copyright by Volkswagen AG. Volkswagen AG does not guarantee or accept any liability with respect to the correctness of information in this document. Copyright by Volkswagen AG. Protected by copyright. Copying for private or commercial purposes, in part or whole, is not permitted unless authorised by Volkswagen AG.

4.20.5 4 - Air filter: cleaning housing and renewing filter element, 4-valve roller rocker finger engines

Removing

– Pull crankcase breather hose -arrow- off filter upper part.

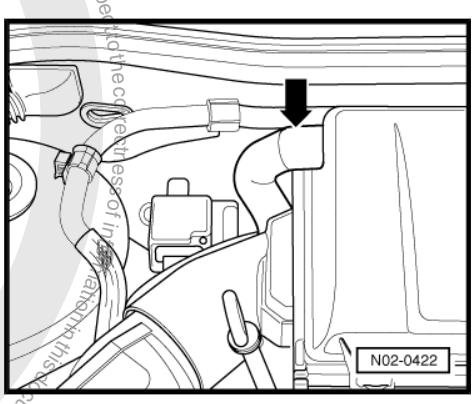

– Remove cross-head bolts -arrows-.

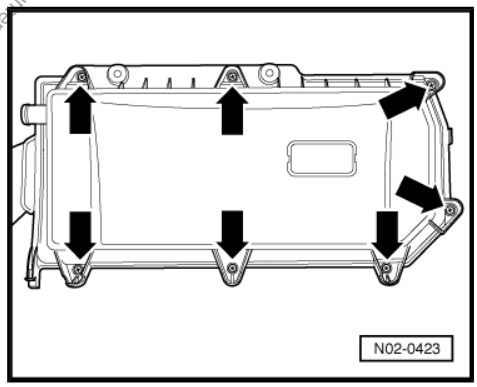

Note

- *The bolts must be loosened or tightened only by hand. When loosening or tightening the securing bolts it is only permitted to use a power screwdriver if:*
- *Speed of power screwdriver max. 200 rpm*
- *Specified torque: max. 3 Nm*

– Lift filter housing upper part and remove upwards.

satelettronica

– Take out used filter element -arrow-.

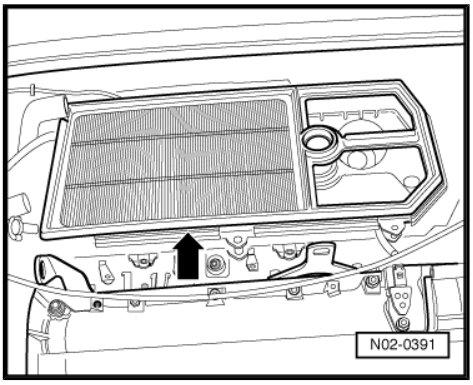

Note

Please observe disposal instructions!

Installing

– Clean filter housing and install new filter element.

– Screw in cross head bolts -arrows-.

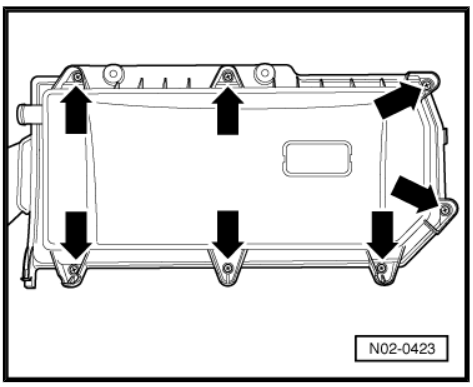

– Connect crankcase breather hose -arrow- to filter upper part.

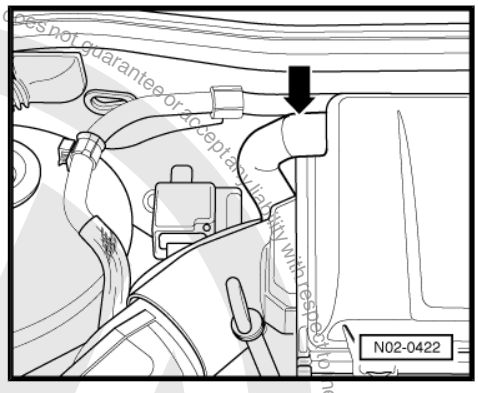

4.20.6 Air filter: cleaning housing and renewing filter element, SD, SDI diesel engines

Removing

– Raise vehicle.

– Release securing clips -arrows- and remove filter lower part downwards.

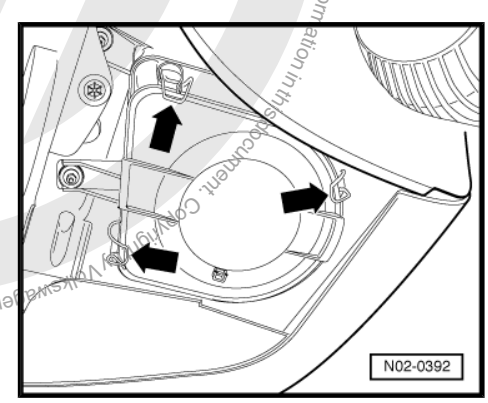

Protected by copyright. Copying for private or commercial purposes, in part or in whole, is not permitted unless authorised by Volkswagen AG. Volkswagen AG does not guarantee or accept any liability with respect to the correctness of information in this document. Copyright by Volkswagen AG.
satelettronica

– Take out used filter element -arrow- downwards.

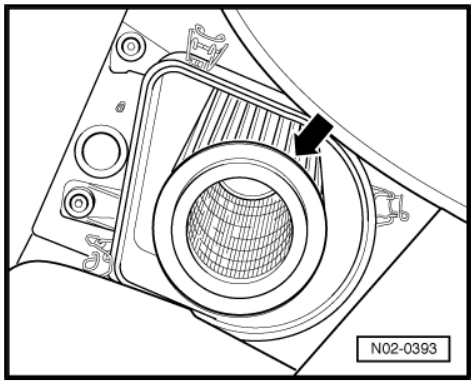

Note

Please observe disposal instructions!

Installing

– Clean filter housing and install new filter element.

– Insert filter lower part and secure clips -arrows-.

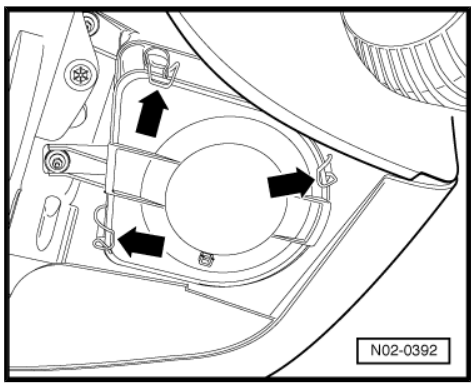

4.20.7 Air filter: cleaning housing and renewing filter element, PD diesel engines

Removing

– Raise vehicle.

Note

- *The bolts must be loosened or tightened only by hand. When loosening or tightening the securing bolts it is only permitted to use a power screwdriver if:*
- *Speed of power screwdriver max. 200 rpm*
- *Specified torque: max. 3 Nm*

– Remove Torx bolts -arrows- and take out filter housing lower part downwards.

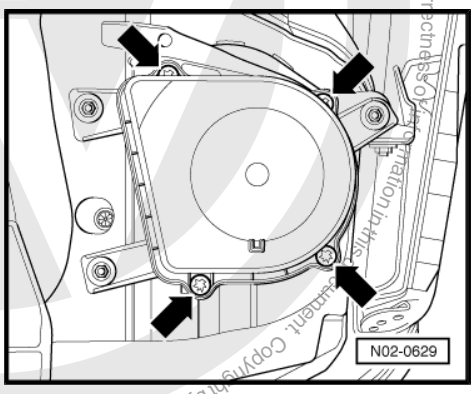

Protected by copyright. Copying for private or commercial purposes, in part or in whole, is not permitted unless authorised by Volkswagen AG. Volkswagen AG does not guarantee or accept any liability with respect to the correctness of information. Copyright by Volkswagen AG.
satelettronica

– Take out used filter element -arrow- downwards.

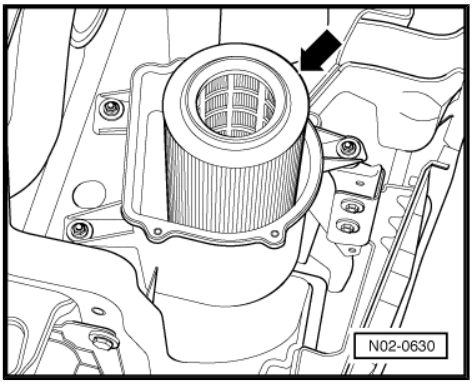

Note

Please observe disposal instructions!

Installing

– Clean filter housing and install new filter element.

– Insert filter housing lower part and tighten Torx bolts -arrows-.

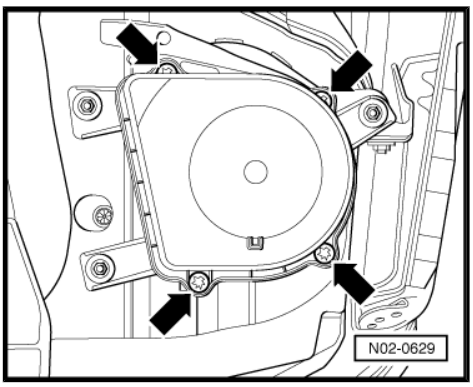

4.21 Engine cover panel -top-: removing and installing

Caution

- ***Do not push with the fist or a tool on the engine cover panel when it is installed or engaged at securing points, it could be damaged.***

- Removing and installing engine cover, 2-valve roller rocker finger engines ⇒ page 57
- Removing and installing engine cover, 4-valve roller rocker finger engines ⇒ page 57
- Removing and installing engine cover, PD diesel engines ⇒ page 58

4.21.1 Engine cover, 2-valve roller rocker finger engines: removing and installing

– See Air filter: cleaning housing and renewing filter element, 2-valve roller rocker finger engines ⇒ page 52

4.21.2 Engine cover, 4-valve roller rocker finger engines: removing and installing

Removing:

Protected by copyright. Copying for private or commercial purposes, in part or in whole, is not permitted unless authorised by Volkswagen AG. Volkswagen AG does not guarantee or accept any liability with respect to the correctness of information in this document. Copyright by Volkswagen AG.

satelettronica

– Remove hexagon socket head bolts -arrows- and take off engine cover.

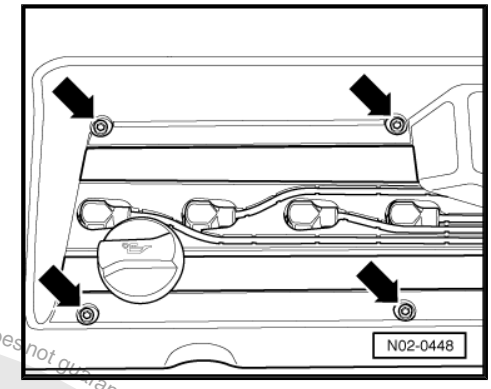

Installing:

– Install engine cover and tighten hexagon socket head bolts -arrows- to 10 Nm.

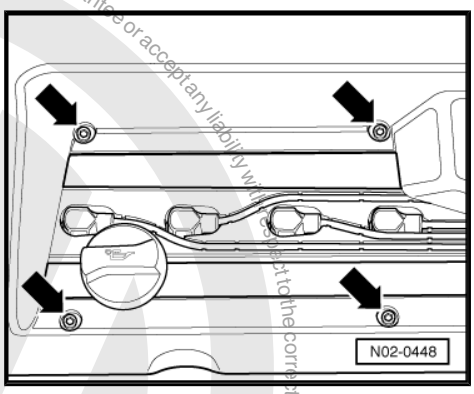

4.21.3 Engine cover, PD diesel engines: removing and installing

Removing:

– Pull out oil dipstick -1- and remove oil filler cap -2-.

– Unclip engine cover and remove upwards.

Installing:

– Fit engine cover onto securing points and press on, until they noticeably engage.

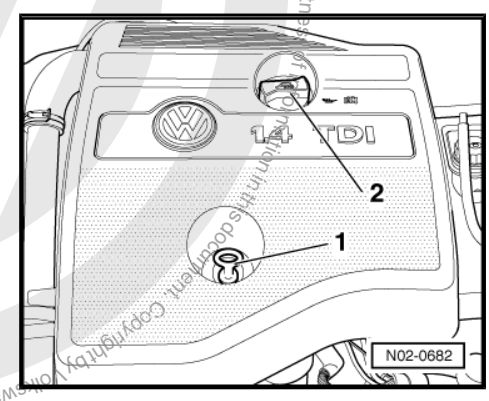

4.22 Engine cover panel, -bottom- (noise insulation): removing and installing

Carry out following procedure:

– Remove hexagon nuts and unclip securing clips -arrows-. Swing noise insulation tray down and remove.

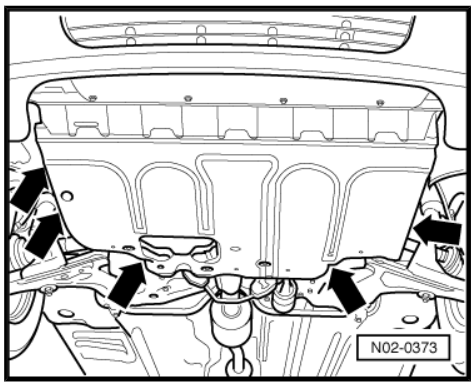

Note

Do not reuse securing clips, they must be renewed each time the engine compartment covers are removed.

4.23 Engine oil level: checking

Please note the following:

Protected by copyright. Copying for private or commercial purposes, in part or in whole, is not permitted unless authorised by Volkswagen AG. Volkswagen AG does not guarantee or accept any liability with respect to the correctness of information in this document. Copyright by Volkswagen AG.
satelettronica

– After shutting off engine, wait at least 3 minutes so that the oil can flow back into the sump.

– Pull out dipstick and clean with a clean cloth and then push dipstick in again onto stop.

Note

Please observe disposal instructions!

– Pull dipstick out again and read oil level.

For dipstick as illustrated:

- A -	Do not top up oil.
- B -	Oil may be replenished. It may happen that the oil level afterwards is in the -A- region.
- C -	Oil must be replenished. It is sufficient if the oil level is in the -B- region (hatched area) afterwards.

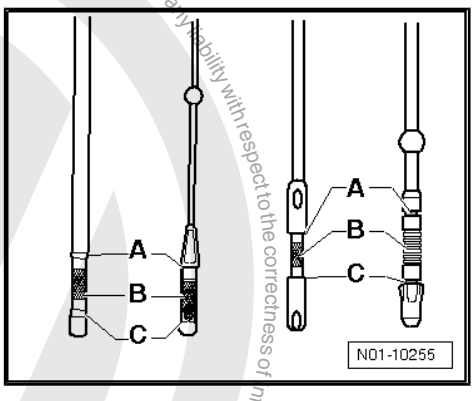

There is a danger of damaging the catalytic converter if the oil level is above the -A- marking.

– If oil level is below -C- marking, replenish oil to -A- marking. Oil specification ⇒ page 6

4.24 Engine oil: draining or extracting and replenishing; renewing oil filter

Engine oil: draining or extracting and replenishing ⇒ page 59 .

Renewing oil filter ⇒ page 61 .

Replenishing engine oil ⇒ page 63 .

4.24.1 Engine oil: draining or extracting and replenishing

Special tools and workshop equipment required

♦ Used oil collection and extraction unit - V.A.G 1782-

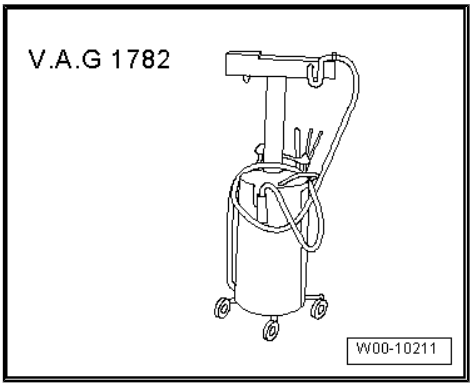

Protected by copyright. Copyright by Volkswagen AG. Volkswagen AG does not guarantee or accept any liability with respect to the correctness of information in this document. Copyright by Volkswagen AG. Commercial use or publication not permitted unless authorised by Volkswagen AG.
satelettronica

- Used oil collector and extractor - VAS 6622-

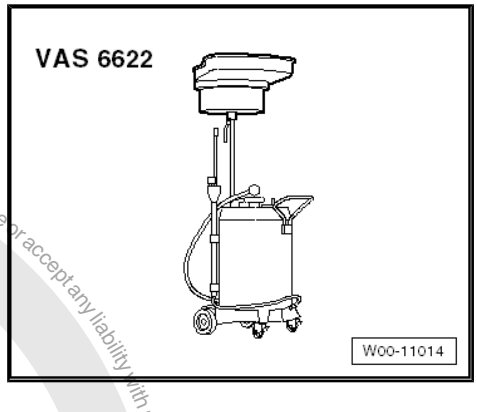

- Oil spill cloth - VAS 6204/1-

Engine oil: draining or extracting

Note

- *For engines with standing oil filter, the oil filter must be renewed before changing the engine oil. When removing the filter element a valve is opened, the oil in the filter housing automatically flows into crankcase.*
- *If engine oil is drained rather than being extracted with the used oil collection and extraction unit, replace oil drain plug. This prevents leaks.*
- *Please observe disposal instructions!*

– Extract engine oil using used oil collection and extraction unit - V.A.G 1782- .

or

– Extract engine oil using used oil collection and extraction unit - VAS 6622- .

or

– Remove oil drain plug.

– Let engine oil drain.

Note

Please observe disposal instructions!

– Screw in new oil drain plug with seal hand-tight.

Capacities and filter change: ⇒ Maintenance tables or ⇒ Power unit; Rep. gr. 17 ; Engine oil

– Replenish engine oil, specification ⇒ page 6 .

Specified torques for oil drain plug:

The torques depend on engine code letters and can be found in ⇒ Engine mechanics; Rep. gr. 17 ; Removing and installing parts of lubrication system .

Protected by copyright. Copying for private or commercial purposes, in part or in whole, is not permitted unless authorised by Volkswagen AG. Volkswagen AG does not guarantee or accept any liability with respect to the correctness of information in this document. Copyright by Volkswagen AG.
satelettronica

WARNING

- *Torque specifications must not be exceeded.*
- *Excessive torque can cause leaks in the area of the oil drain plug or even damage.*

4.24.2 Oil filter: renewing

Renewing oil filter, 1.4 l, 1.6 l injection engines, with hexagonal flats on oil filter ⇒ page 62 .

Renewing oil filter, 1.4 l, 1.6 l injection engines, without hexagonal flats on oil filter ⇒ page 62

Renewing oil filter, SDI/TDI diesel engines ⇒ page 62 .

Renewing oil filter, TDI PD diesel engines ⇒ page 62 .

Special tools and workshop equipment required

- Oil filter tool - VAS 3417-

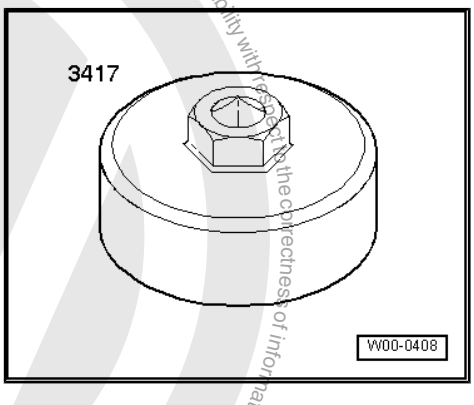

- Torque wrench - V.A.G 1331/- (5 - 50 Nm)

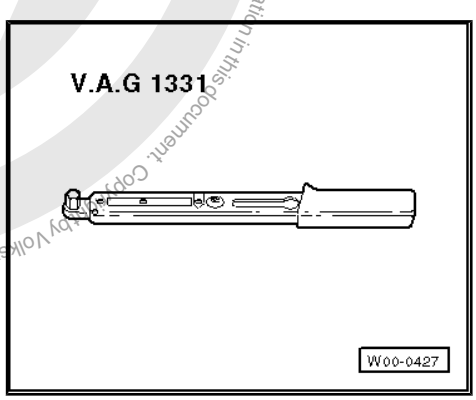

- Oil filter tool (commercially available)

or

- Oil filter strap wrench

Carry out following procedure:

Protected by copyright. Copying for private or commercial purposes, in part or in whole, is not permitted unless authorised by Volkswagen AG. Volkswagen AG does not guarantee or accept any liability with respect to the correctness of information in this document. Copyright by Volkswagen AG.
satelettronica

Renewing oil filter, 1.4 l, 1.6 l injection engines, without hexagonal flats on oil filter

– Loosen oil filter -arrow- from below with strap wrench and remove oil filter.

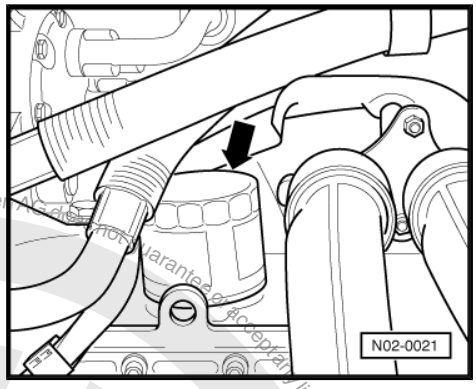

Note

Please observe disposal instructions!

– Clean engine sealing surface.

– Oil rubber seal lightly on new filter. Thus the oil filter can adhere better when tightening, which assures best possible sealing.

– Screw in filter and tighten hand-tight.

Renewing oil filter, 1.4 l, 1.6 l injection engines, with hexagonal flats on oil filter

– Loosen oil filter -arrow- from below with a 30 mm open jaw spanner and remove oil filter.

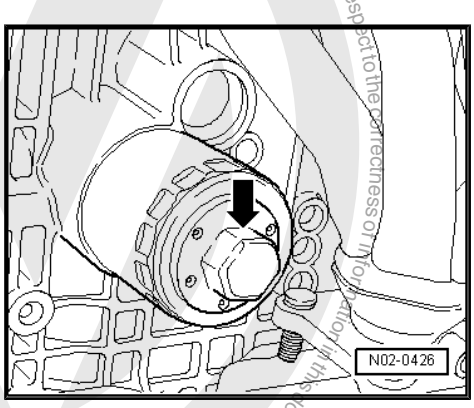

Note

Please observe disposal instructions!

– Clean engine sealing surface.

– Oil rubber seal lightly on new filter. Thus the oil filter can adhere better when tightening, which assures best possible sealing.

– Screw in filter and tighten hand-tight.

Renewing oil filter, SDI/TDI diesel engines

– Loosen oil filter -arrow- from below with strap wrench and remove oil filter.

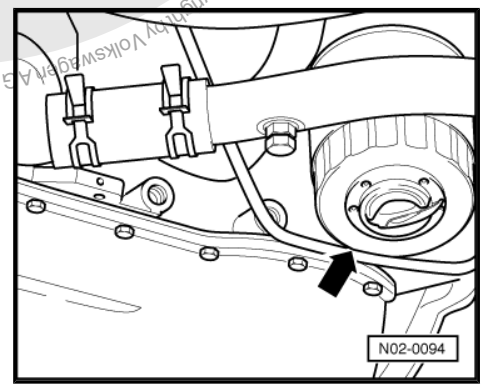

Note

Please observe disposal instructions!

– Clean engine sealing surface.

– Oil rubber seal lightly on new filter. Thus the oil filter can adhere better when tightening, which assures best possible sealing.

– Screw in filter and tighten hand-tight.

Renewing oil filter, TDI unit injector diesel engines

Removing

Note

- *Please observe disposal instructions!*
- *Oil new O-rings before installing.*

Protected by copyright. Copyright by Volkswagen AG.
Copyright by Volkswagen AG. Volkswagen AG does not guarantee or accept any liability with respect to the correctness of information in this document. Copying for private or commercial purposes, in part or in whole, is not permitted unless authorised by Volkswagen AG.
satelettronica

Loosen cover -arrow- e.g. e.g. using 36 mm combination spanner or 36 mm socket - T10125- .

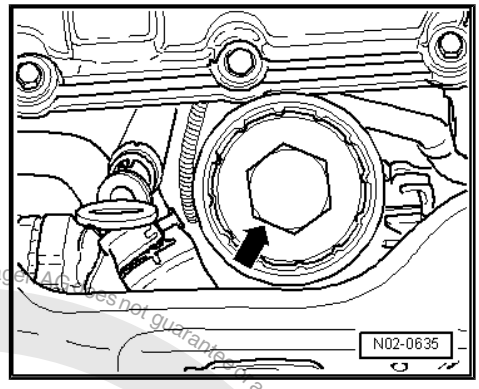

Note

Before draining or extracting, release sealing cap so that the engine oil can flow out of filter housing.

– Clean sealing surfaces on threaded cap and oil filter housing.

Installing

– Renew filter element -3-.

– Renew O-rings -2 and 4-.

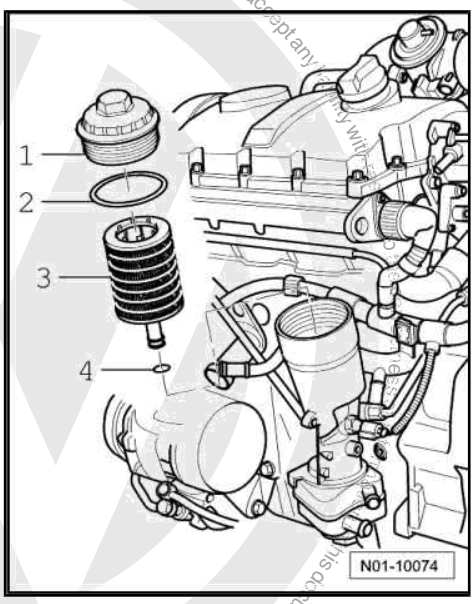

– Install threaded cap -arrow- and tighten to 25 Nm.

Further assembly is basically the reverse of the removal procedure.

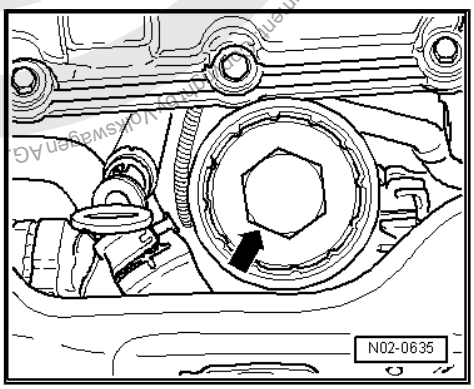

4.24.3 Engine oil: replenishing

Oil specifications see ⇒ page 6

General information

Note

Please observe disposal instructions!

– After replenishing with oil, wait at least 3 minutes and then check oil level.

Protected by copyright. Copying for private or commercial purposes, in part or in whole, is not permitted unless authorised by Volkswagen AG. Volkswagen AG does not guarantee or accept any liability with respect to the correctness and completeness of this document.
satelettronica

Note for turbo engines:

- After changing engine oil and oil filter, check following after first engine start:
- The engine must only run at idling speed as long as the oil pressure warning lamp lights up in dash panel. Do not rev up! If the engine is revved up the turbocharger can be damaged or fail completely.
- The full oil pressure is not attained until the warning lamp has gone out, only then can the engine be revved up.

– Pull out dipstick, wipe with a clean cloth and push dipstick in again to limit stop.

– Pull dipstick out again and read oil level.

Capacities and filter change: ⇒ Maintenance tables or ⇒ Power unit; Rep. gr. 17 ; Engine oil

For dipstick as illustrated:

A - Do not top up oil.

B - Oil may be replenished. Oil level after this measure could be in -A- region.

C - Oil must be replenished. It is sufficient if the oil level is in the -B- region (hatched area) afterwards.

There is a danger of damaging the catalytic converter if the oil level is above the -A- marking.

– If oil level is below -C- marking, replenish oil to -A- marking. Oil specification ⇒ page 6 .

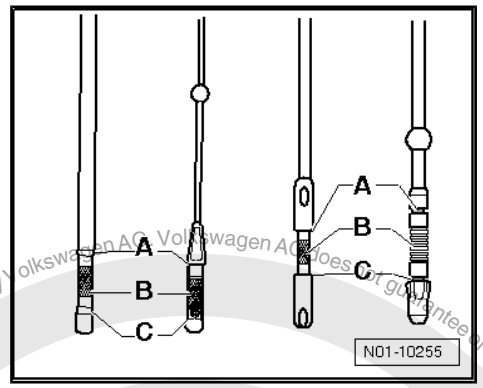

4.25 Engine and components in engine compartment: inspecting for leaks and damage (from above and below)

Inspect as follows:

– Check engine and components in engine compartment for leaks and damage.

– Check lines, hoses and connections of

- Fuel system
- Cooling and heating system
- And brake system

For leaks, abrasions, porosity and brittleness.

Note

- *Arrange for defects to be rectified as repair measures.*
- *If fluid loss is greater than can be expected through normal use, determine source and rectify (repair measure).*

4.26 Carrying out road test

Which of the following can be checked depends on vehicle equipment and local conditions (urban/country).

Check the following during a road test:

– Engine: output, misfiring, idling speed, acceleration

Protected by copyright. Copying for private or commercial purposes, in part or in whole, is not permitted unless authorised by Volkswagen AG. Volkswagen AG does not guarantee or accept any liability with respect to the correctness of information in this document. Copyright by Volkswagen AG.
satelettronica

– Clutch: pulling away, pedal pressure, odours
– Gear selection: ease of operation, stick position
– Automatic gearbox: selector lever position, shift lock / ignition key removal lock, shift behaviour.
– ABS function: pulsing must be felt at the brake pedal during ABS-regulated braking
– Foot brake and handbrake: function, free travel and effectiveness, pulling to one side, juddering, squeal
– Steering: function, steering free clearance, steering wheel centred when vehicle is travelling straight ahead
– Tilting roof: function
– Folding fabric sunroof: function
– Radio: Reception, GALA, interference
– Multi-function indicator (MFI): functions
– Air conditioning system: function
– Vehicle: pulling to one side when travelling straight-ahead (level road)
– Imbalance: wheels, drive shafts
– Wheel bearings: noises
– Engine: hot starting behaviour

4.27 Wheel bolts: tightening to specified torque

Removing and installing wheel bolt caps ⇒ page 65

Loosening or tightening anti-theft wheel bolts ⇒ page 66

Retightening wheel securing bolts ⇒ page 67

Removing and installing wheel bolt caps

Note

Depending on vehicle equipment, the wheel bolts could be covered by the following components:

- Wheel bolt caps
- Hub cap
- Full-size hub cap

– Remove the respective wheel bolt cover, if fitted.

Note

The puller hook to remove the cover caps or the wheel hub trim is located in the vehicle tool kit.

Protected by copyright. Copying for private or commercial purposes, in part or in whole, is not permitted unless authorised by Volkswagen AG. Volkswagen AG does not guarantee or accept any liability with respect to the correctness of information in this document. Copyright by Volkswagen AG.
satelettronica

Example, removing hub cap

– Hook puller hook into one drilling of wheel hub trim and pull off in -direction of arrow-.

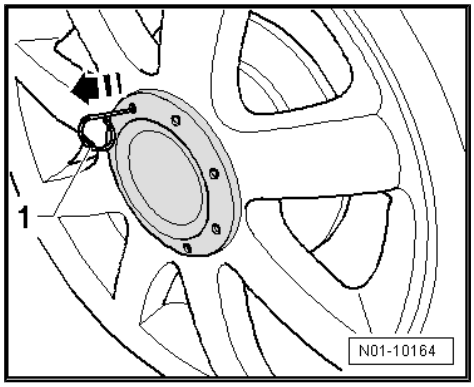

Fitting instructions

Note

- *The cover caps protect the wheel bolts and should be reconnected after the wheel securing bolts have been retightened.*
- *Ensure that on some rims the lug of the wheel hub trim locates in the groove of the rim.*
- *After completing work, place adapter and puller hooks with vehicle tool kit.*

– On vehicles with full wheel trim install full wheel trim so that the tyre filler valve is guided through the cut-out provided -arrow-.

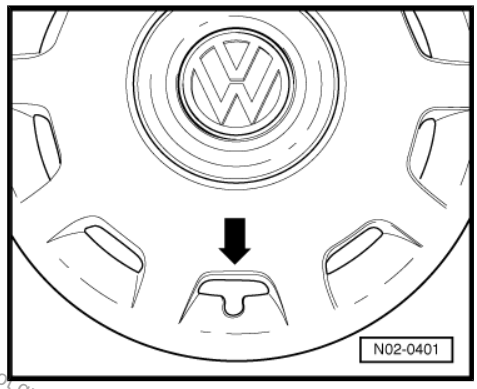

Loosening or tightening anti-theft wheel bolts

Note

- *The adapter to loosen and tighten the anti-theft wheel bolts can be found in the vehicle tool kit.*
- *If the adapter to loosen or tighten the anti-theft wheel bolts is not available in the vehicle, use the adapter set for tamper-proof wheel bolts - T10101- .*
- *If the adapter is not available, a new replacement adapter can only be obtained via the code number.*

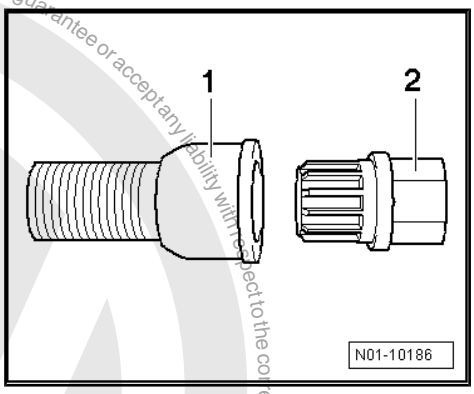

Special tools and workshop equipment required

- Adapter set for wheel bolts - T10101-

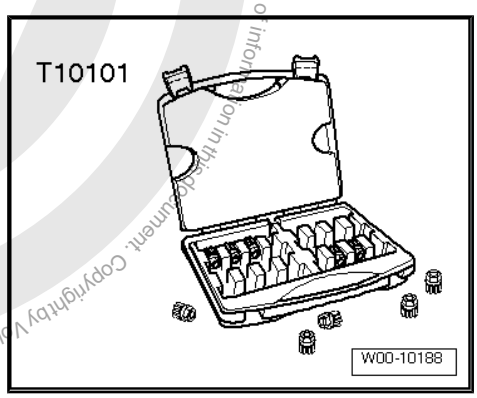

– Slide adapter into anti-theft wheel bolt onto stop.

Protected by copyright. Copying for private or commercial purposes, in part or in whole, is not permitted unless authorised by Volkswagen AG. Volkswagen AG does not guarantee or accept any liability with respect to the correctness of information in this document. Copyright by Volkswagen AG.
satelettronica

– Slide the wheel bolt wrench onto adapter onto stop.

– Retighten the wheel securing bolts to correct torque setting.

Retightening wheel securing bolts

Special tools and workshop equipment required

♦ Torque wrench - V.A.G 1332-

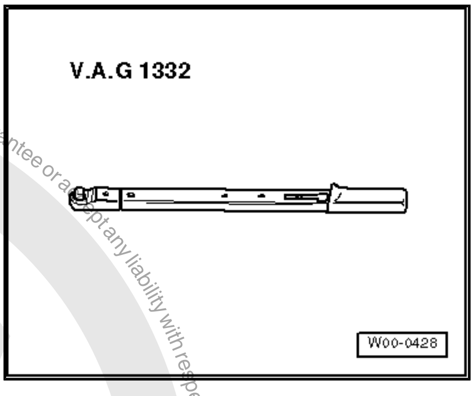

Note

Ensure that wheel bolts are tightened diagonally and alternately.

Specified torque: 110 Nm

4.28 Radio and radio-navigation system: sticking serial number and code number onto unit card

To release the electronic lock of the radio and radio-navigation system, the code number for the unit must be entered.

The code number and serial number of the unit are indicated on the unit card.

The unit card is located at front of vehicle wallet.

– Stick serial number and code number onto unit card.

4.29 Radio/radio-navigation system: activating anti-theft coding

The radio units are supplied with a fixed code. Fixed code means that each radio unit with an anti-theft coding is programmed with its own code number. This fixed code is not active when leaving the factory.

Activate fixed code on “alpha” radio units as follows:

The security coding of the ready to play radio is not activated until the fixed code is entered. The fixed code is to be activated as follows:

– Switch radio unit on.

– “SAFE” appears on digital display.

Protected by copyright. Copying for private or commercial purposes, in part or in whole, is not permitted unless authorised by Volkswagen AG. Volkswagen AG does not guarantee or accept any liability with respect to the correctness of information in this document. Copyright by Volkswagen AG.

satelettronica

– Press buttons TP and TA -1- simultaneously until “1000” appears on the digital display. Release buttons.

– With the help of station buttons 1 to 4 enter code number from radio card. Press button 1 to enter the first digit of the code number, button 2 to enter the 2nd digit and so on.

– Then press buttons TP and TA -1- simultaneously again and hold down until “SAFE” appears on the frequency display. Release buttons. Soon afterwards a frequency will automatically appear.

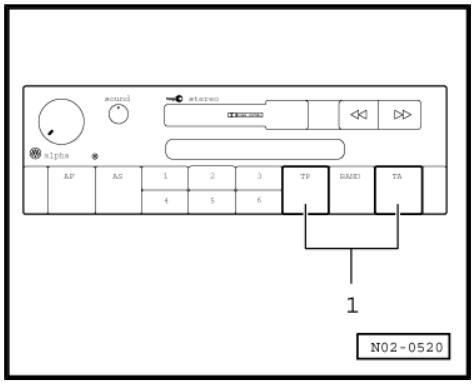

If the fixed code number has been entered correctly in the radio unit, when the ignition key is removed the diode located next to the unit name will flash. When the diode flashes the radio is ready-for-use and the anti-theft coding is activated.

On radio units “beta and gamma” activate the fixed code as follows:

– Switch radio unit on.

– “SAFE” appears on digital display.

– After approx. 3 seconds “1000” appears on display.

– With the help of station buttons 1 to 4 enter code number from radio card. Press button 1 to enter the first digit of the code number, button 2 to enter the 2nd digit and so on.

– Then press the search function -1- or manual setting -2- rocker switch for longer than 2 seconds. Release button.

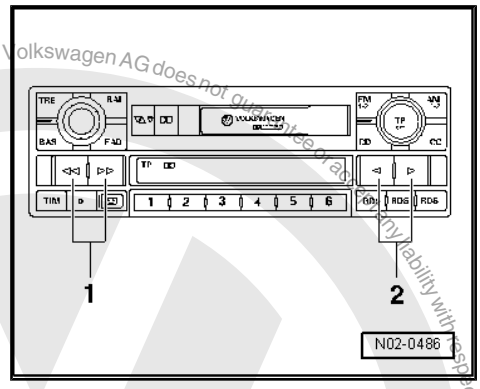

If the correct code has been entered, the actual radio frequency will appear after a short “learning phase”. During this pause the stations with the best reception will be automatically stored to an internal memory list and can be called up. The LED on the lower left of the radio must flash when the ignition key is removed. When the diode flashes the radio is ready-for-use and the anti-theft coding is activated.

Activating fixed code on “radio navigation system” as follows:

– Switch on radio navigation system using press button -1-.

– Enter code by turning rotary/push button -2- until number required on number list -3- is highlighted and confirm each number by pressing the button briefly.

– When code has been entered fully confirm by pressing the rotary/press button -2- (at least 2 seconds).

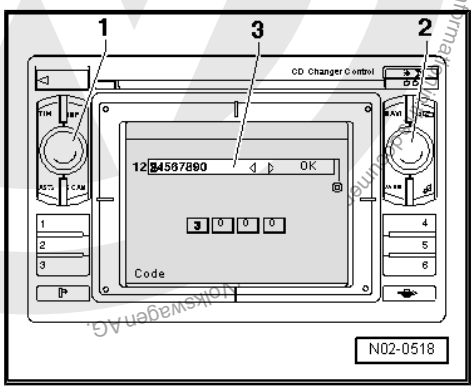

If the correct code has been entered, the actual radio frequency will appear after a short “learning phase”. During this pause the stations with the best reception will be automatically stored to an internal memory list and can be called up.

The LED on the top right of the radio/navigation system must flash when the ignition key is removed. If the diode flashes, the radio navigation system is ready-for-use and the anti-theft coding is activated.

4.30 Manual gearbox/final drive: checking oil level, topping-up oil if necessary

– »Manual gearbox« ⇒ 5-speed manual gearbox 085; Rep. gr. 34 ; Checking gear oil »Checking gear oil«

– »Manual gearbox« ⇒ 5-speed manual gearbox 02J; Rep. gr. 34 ; Checking gear oil »Checking gear oil«

satelettronica

Copyright © Volkswagen AG. Volkswagen AG does not guarantee or accept any liability with respect to the correctness of information in this document. Copyright by Volkswagen AG. Copying for private or commercial purposes, in part or in whole, is not permitted unless authorised by Volkswagen AG.

4.31 Headlight adjustment: checking, adjusting if necessary

Special tools and workshop equipment required

- Headlight adjustment unit - VAS 5046-

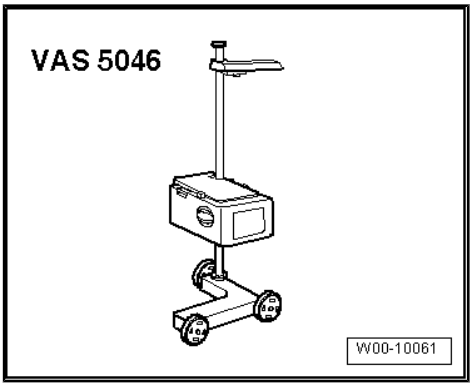

- or:
- Headlight adjustment unit - VAS 5047-

The following test and adjustment instructions are applicable in all countries. However, national guidelines and regulations of the respective country are to be followed.

Conditions for testing and adjustment:

- Tyre pressures OK.
- Lenses must not be damaged or dirty.
- Reflectors and bulbs OK.
- Vehicle must be loaded.

Loading: with one person or 75 kg on the driver seat and the vehicle otherwise unloaded (unladen weight).

The unladen weight is the weight of vehicle ready for operation with a full fuel tank (at least 90%) including weight of all equipment normally carried (e.g. spare wheel, tools, jack, fire extinguisher etc.).

If the fuel tank is not at least 90% full, then load as follows:

– Read level of fuel in fuel tank on fuel gauge. Determine additional weight from following table and place weight in luggage compartment.

4.31.1 Fuel gauge table

Fuel gauge	Additional weight in kg
1/4	30
1/2	20
3/4	10
Full	0

Example:

When the fuel tank is half full an additional weight of 20 kg must be placed in the luggage compartment.

satelettronica

Note

The additional weight is best produced using fuel canisters filled with water (a 5 litre fuel canister filled with water weighs approx. 5 kg).

The vehicle must be rolled forward or backward several metres or front and rear springs must be bounced fully several times so that springs settle.

- Vehicle and headlight adjuster must be on a level surface. ⇒ Operating instructions for headlight adjuster - VAS 5046- or headlight adjuster - VAS 5047- .
- Vehicle and headlight adjuster must be aligned.
- Inclination must be set.

Inclination information in “%” is stamped into trim above headlight. Headlights must be adjusted according to this information. Percentage given is based on a projection distance of 10 metres. Example: converting a dip setting of e.g. 1.2% is equivalent to 12 cm.

- The headlight range control thumb wheel must be in position (-).

4.31.2 Checking headlight adjustment (using new test screen without 15° setting line)

Headlights:

Please check the following:

– Whether, with the dipped beam switched on, the horizontal light-dark border contacts the dividing line -1- of the test area and

– Whether the breaking point -2- between the horizontal part of the bright/dark boundary on the left and the rising part on the right lies on the vertical line of the central point -3-. The bright core of the light beam must be to the right of the vertical line.

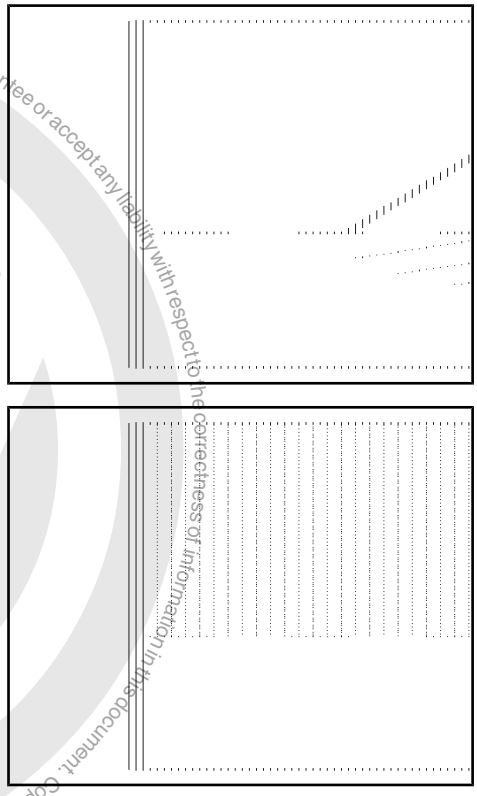

Note

- *To simplify finding the breaking point -2-, cover and uncover left (from driver perspective) half of the headlight a few times. Then check dipped beam again.*
- *After correct adjustment of dipped beams, the centre point of the main beam must lie on the centre mark -3-.*
- *For the previous test screen with 15° setting line, adjust as for new test screen. To avoid incorrect settings, ignore the 15° setting line.*

Protected by copyright. Copying for private or commercial purposes, in part or in whole, is not permitted unless authorised by Volkswagen AG. Volkswagen AG does not guarantee or accept any liability with respect to the correctness of information in this document. Copyright by Volkswagen AG.
satelettronica

Fog lights:

– Check whether the upper bright/dark boundary touches the setting line and runs horizontally over the entire width of the test screen.

Other additional lights:

Additionally retrofitted lights of other systems must be checked and set according to valid guidelines.

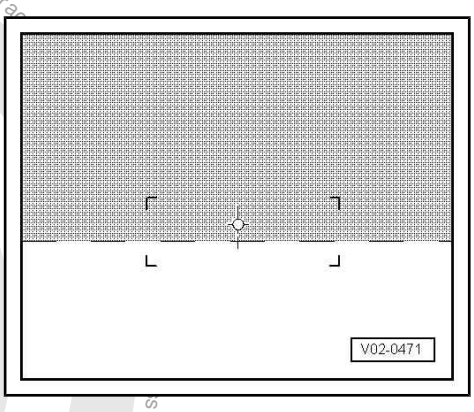

4.31.3 Headlights with gas discharge bulbs

The following test and adjustment instructions are applicable in all countries. However, national guidelines and regulations of the respective country are to be followed.

The following are prerequisites for adjusting headlights gas discharge bulbs:

- Tyre pressures OK.
- Lenses must not be damaged or dirty.
- Reflectors and bulbs OK.
- Handbrake must be released and no gear selected.
- Steering wheel must be in straight-ahead position.
- Vehicle must not be moved during basic setting (do not “open or close” doors or lean on or enter vehicle).
- Nobody may be in the vehicle and the vehicle must not be loaded.
- The vehicle must be rolled forward or backward several metres or front and rear springs must be bounced fully several times so that springs settle.
- Vehicle and headlight adjuster must be on a level surface. ⇒ Headlight adjuster operating instructions.
- Vehicle and headlight adjuster must be aligned.
- Inclination must be set.

Inclination information in “%” is stamped into trim above headlight. Headlights must be adjusted according to this information. Percentage given is based on a projection distance of 10 metres. Example: converting a dip setting of e.g. 1.2% is equivalent to 12 cm.

Note

♦ *Vehicles with gas discharge bulbs are equipped with automatic headlight range control. On these vehicles, the procedure “Basic setting” ⇒ page 72 or adjusting headlights must be carried out.*

♦ *After the headlights have been adjusted, the fault memory must be read. Therefore, the procedure described here must be strictly followed.*

Protected by copyright. Copying for private or commercial purposes, in part or in whole, is not permitted unless authorised by Volkswagen AG. Volkswagen AG does not guarantee or assume liability for the accuracy, completeness and timeliness of information in this document. Copyright by Volkswagen AG.
satelettronica

4.31.4 Carrying out basic setting using vehicle diagnostic tester

Carry out following procedure:

– Apply handbrake.

– Automatic gearbox: Move selector lever to position “P” or “N”.

– Manual gearbox: gear lever in neutral.

– Connect vehicle diagnostic tester ⇒ page 20 .

– Switch on ignition.

Indicated on display:

Select operating mode:

– Press button for `Vehicle self-diagnosis` on display -arrow-.

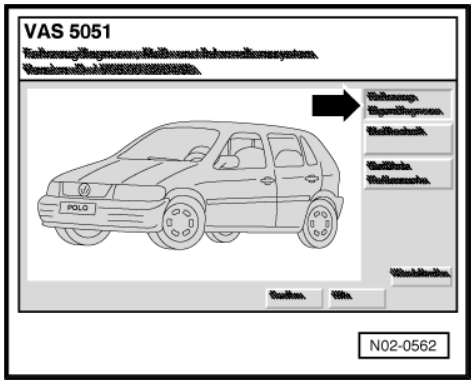

Note

If the display is not as shown in the procedure: ⇒ Operating instructions for vehicle diagnostic tester .

Indicated on display:

– Press “55 - Headlight range control” on display -arrow-.

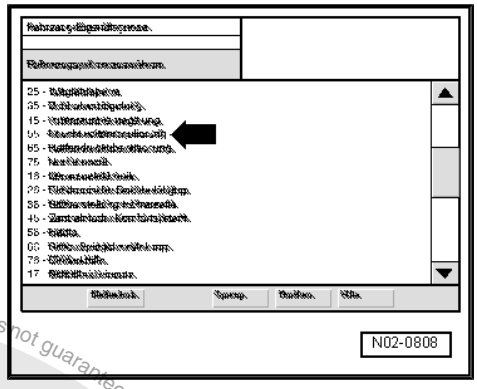

Indicated on display:

The control unit identification and coding are displayed -arrow-.

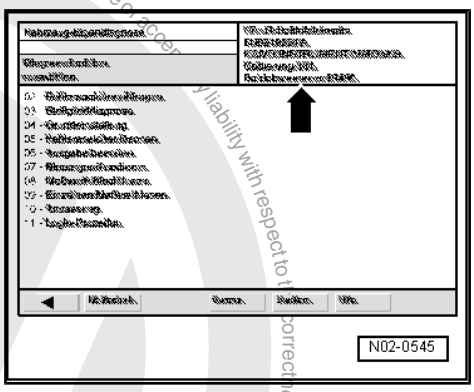

Protected by copyright. Copying for private or commercial purposes, in part or in whole, is not permitted unless authorised by Volkswagen AG. Volkswagen AG does not guarantee or accept any liability with respect to the correctness of information in this document. Copyright by Volkswagen AG.

satelettronica

Indicated on display:

– Press “04 - Initiate basic setting” on display -arrow-.

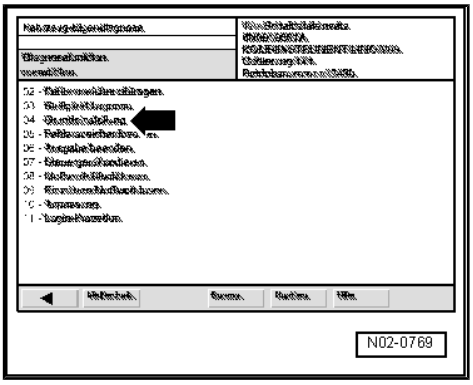

Indicated on display:

– Press 001 in number block of display -arrow- (001 selects “display group number 001”).

– Confirm entry with Q button on display number block.

After “Wait” is indicated on display, the following message appears:

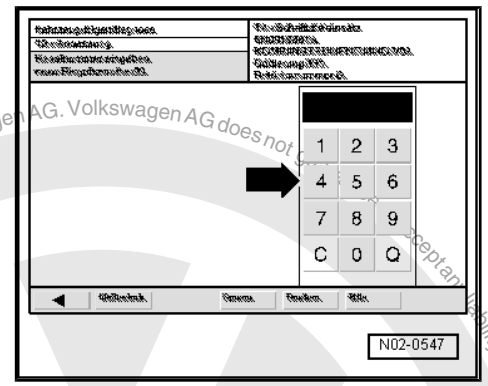

Indicated on display:

– Now adjust headlights ⇒ page 75 .

– After adjusting headlights, press button ← -arrow- on display.

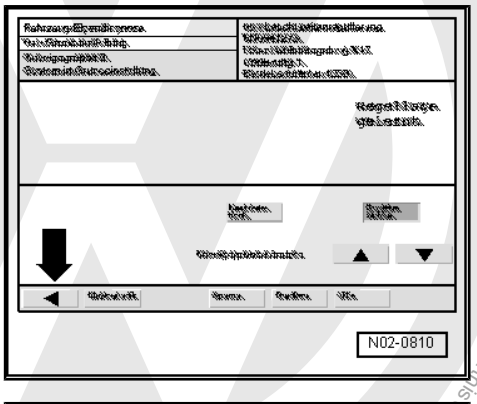

Indicated on display:

– Press 002 in number block of display -arrow- (002 selects “display group number 002”).

– Confirm entry with Q button on display number block.

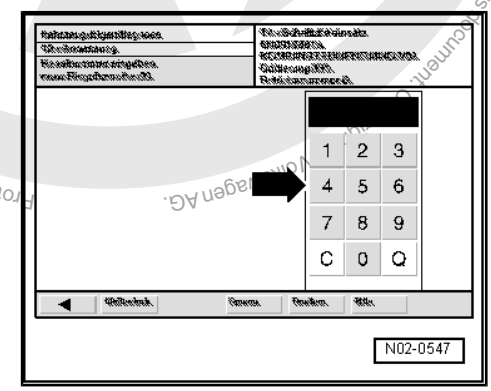

Protected by copyright. Copying for private or commercial purposes, in part or in whole, is not permitted unless authorised by Volkswagen AG. Volkswagen AG does not guarantee or accept any liability with respect to the correctness of information in this document.
satelletronica

Indicated on display:

The reference position of the headlight will now be “learnt” by the control unit.

– Press ⏎ button -arrow- on display.

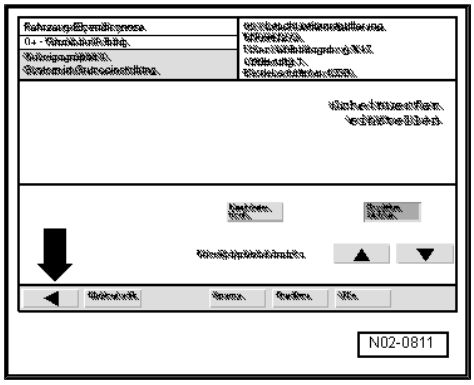

Indicated on display:

– Press ⏎ button -arrow- on display.

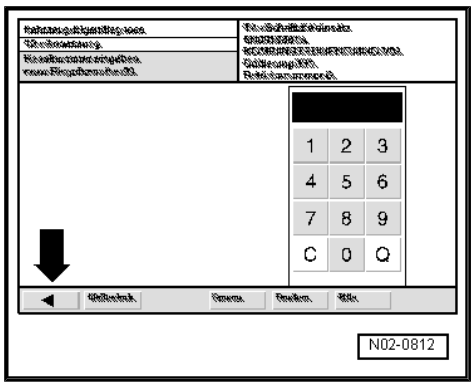

Indicated on display:

– Press “02 - Read fault memory” on display -arrow-.

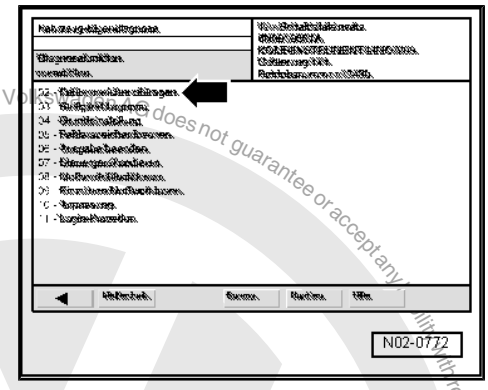

Indicated on display:

Any system faults that are stored will be displayed one after the other.

If faults are stored, repairs are necessary. The fault log must accompany vehicle to repair.

– Press ⏎ button -arrow- on display.

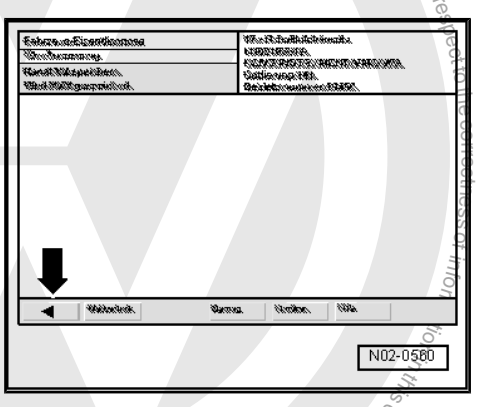

Protected by copyright. Copying for private or commercial purposes, in part or in whole, is not permitted unless authorised by Volkswagen AG. Volkswagen AG does not guarantee or accept any liability with respect to the correctness of information in this document. Copyright by Volkswagen AG.
satelettronica

Protected by copyright. Copyright by Volkswagen AG. Volkswagen AG does not guarantee or accept any liability with respect to the correctness of information in this document. Copyright by Volkswagen AG. Reproduction in whole or in part is not permitted unless authorised by Volkswagen AG. Volkswagen AG does not guarantee or accept any liability with respect to the correctness of information in this document. Copyright by Volkswagen AG.

Indicated on display:

– Press GoTo button on display -arrow-.

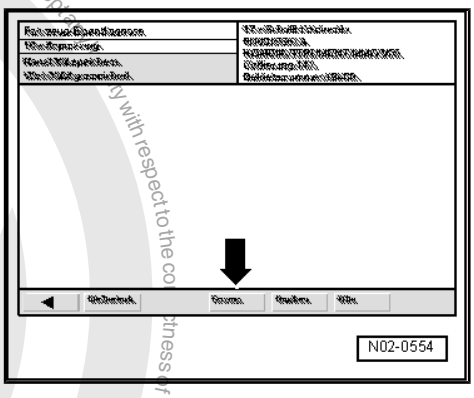

Indicated on display:

– Press End button on display -arrow-.
– Press End button in End menu.
– Switch off ignition and separate diagnosis connections.
– Install ashtray insert.

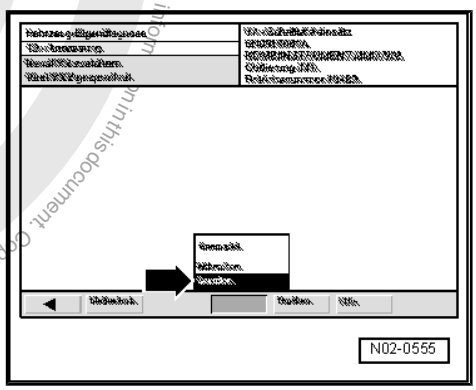

4.31.5 Adjusting headlights vehicles ► 09.99

Left headlight

A - Lateral adjustment

B - Height adjustment

– Adjust headlight at front using a suitable cross head screwdriver.

Both adjustment screws on right-hand headlight are a mirror image.

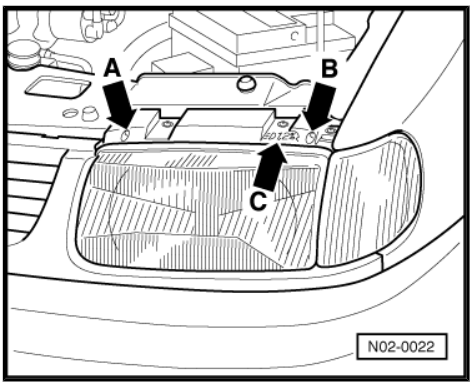

Note

Please check also that both headlights move evenly when headlight range control is operated.

4.31.6 Adjusting headlights vehicles 10.99 ►

Left headlights (the right headlight adjustment screws are a mirror image):

1 - Lateral adjustment

2 - Height adjustment

– Adjust headlight at front using a suitable cross head screwdriver.

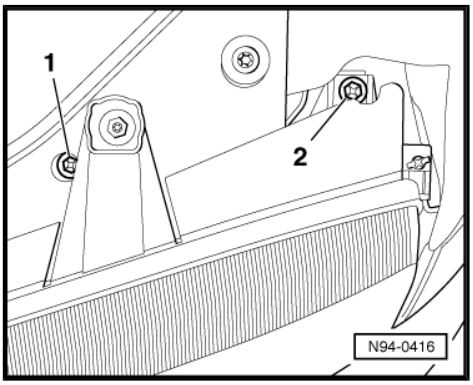

Note

Please check also that both headlights move evenly when headlight range control is operated.

satelettronica

4.31.7 Vehicles ► 09.99

Left fog light:

– To reduce the beam range turn adjustment screw -arrow- to the right. There is no provision for lateral adjustment.

Location of adjustment screw on right-hand headlight is a mirror image.

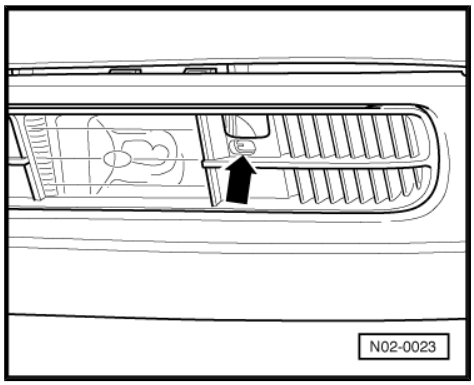

4.31.8 Vehicles 10.99 ►

Right fog light

– Unscrew cross head bolt -arrow- and remove trim -1-.

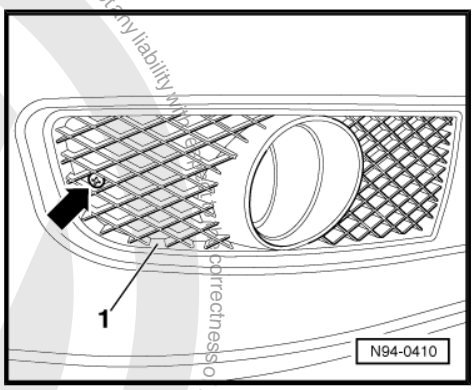

– To adjust the range turn adjustment screw -arrow-. There is no provision for lateral adjustment.

Location of adjustment screw on left-hand headlight is a mirror image.

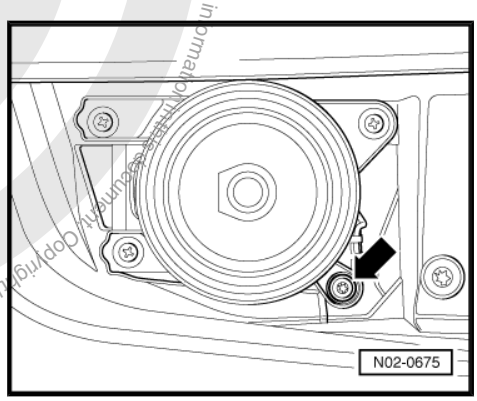

4.32 Sunroof: checking function, cleaning and greasing guide rails

Carry out following procedure:

– Check function of sunroof.

Protected by copyright. Copying for private or commercial purposes, in part or in whole, is not permitted unless authorised by Volkswagen AG. Volkswagen AG does not guarantee or accept any liability with respect to the correctness of information. Copyright by Volkswagen AG.
satelettronica

– Clean guide rails -arrows- and lubricate with special grease - G 000 450 02- .

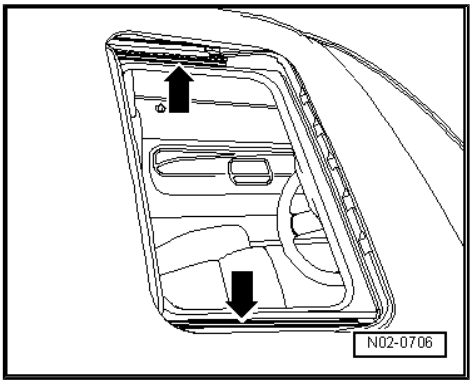

4.33 Window wash/wipe system and headlight washer system: checking function

Check anti-freeze concentration of Windscreen Clear - G 052 164- ⇒ page 77 .

Window wash/wipe system: checking spray jet settings ⇒ page 78 .

Headlight washer system: checking spray jet settings ⇒ page 81 .

4.33.1 Windscreen wash/wipe system: checking anti-freeze concentration and replenishing fluid if necessary

Special tools and workshop equipment required

♦ Refractometer - T10007-

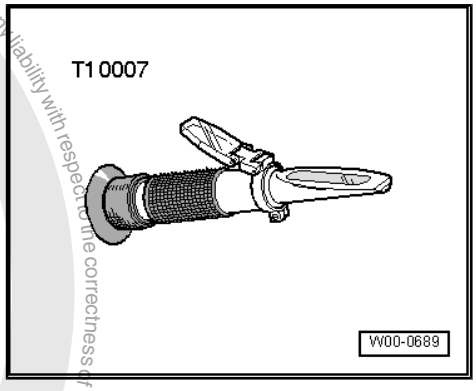

Note

Read precise value for the following tests at light-dark border. Using a pipette, place a drop of water on the glass to improve the readability of the bright/dark boundary. The light-dark border can be clearly recognised on the "WATERLINE".

– Check concentration of anti-freeze additive using refractometer - T10007- (refer to operating instructions).

satelettronica

The scale -1- of the refractometer is calibrated for Genuine Volkswagen Windscreen Clear - G 052 164- .

The scale -2- is designed for commercially available windscreen cleanser as well as a mixture of commercially available windscreen cleanser and Windscreen Clear - G 052 164- .

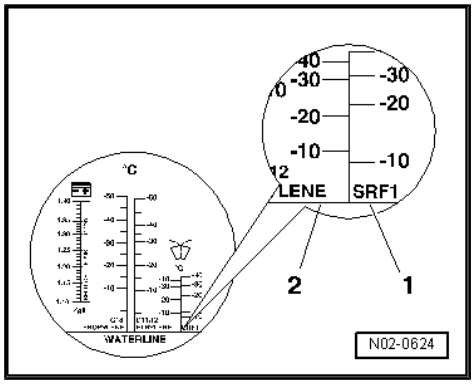

Mixing ratio:

Frost protection to	Windscreen Clear - G 052 164-	Water
-17/-18° C	1 part	3 parts
-22/-23° C	1 part	2 parts
-37/-38° C	1 part	1 part

Replenishing fluid:

The fluid reservoir of the window washer system must be filled completely.

Starting immediately, use only Windscreen Clear - G 052 164- all-year-round when replenishing the window wash/wipe system.

Note

- *Windscreen Clear - G 052 164- protects the spray jets, fluid reservoir and connecting hoses from freezing.*
- *For all vehicles having fan-type spray jets, the reservoir must be filled with "Genuine Volkswagen Windscreen Clear" Windscreen Clear - G 052 164- , as this fluid has a low viscosity at temperatures below freezing. Otherwise the complicated spray jet system can become blocked by the crystallised washer fluid, which affects the spray pattern of the spray jet. Windscreen Clear - G 052 164- ensures that the fan type spray jets remain fully functional also at low temperatures.*
- *Replenish genuine Windscreen Clear - G 052 164- also in the warmer periods of the year. The powerful cleanser removes wax and oil residue from the glass.*
- *Frost protection must be guaranteed to approx. -25°C (approx. -35°C in countries with an arctic climate) in the washer system.*

4.33.2 Window washer system: checking jet setting, adjusting jets if necessary

Note

- *If the spray field is uneven due to soiling in the spray jet, remove spray jet, ⇒ Rep. gr. 92 and rinse with water opposite to direction of spray.*
- *Subsequent blowing through with compressed air against the spraying direction is permitted.*

Copyright by Volkswagen AG. Volkswagen AG does not guarantee or accept any liability with respect to the correctness of information in this document. Copyright by Volkswagen AG. Forbidden to copy, distribute, or make accessible to third parties, for commercial purposes, in any form or in any medium, no permitted unless authorized by Volkswagen AG.

satelettronica

Caution

- ***Never use items to clean the spray jets!***
- ***Never use a needle or a similar object to adjust the spray jets, otherwise the water passages in the spray jet will be damaged!***

Washer jets without presetting ⇒ page 79

Preset washer jets ⇒ page 79

Washer jet for rear window washer system ⇒ page 80

Washer jets without presetting

Special tools and workshop equipment required

- Adjusting tool - T10127-

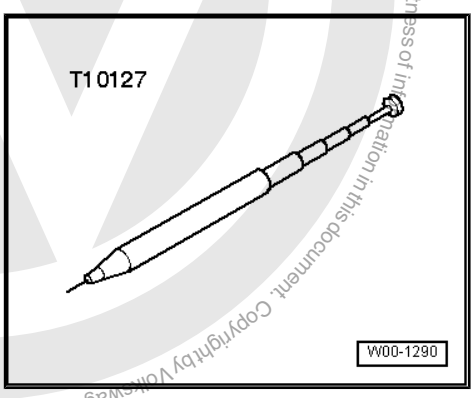

Adjust spray jets so that the water jets spray onto windscreen at positions shown.

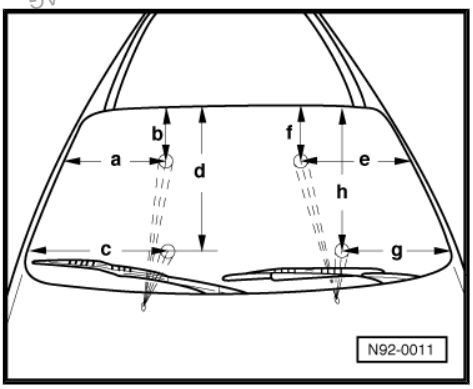

Note

Mark the points at which water strikes the window with a water-soluble pin.

– Adjust the washer jets to the following dimensions:

a	280 mm	e	370 mm
b	290 mm	f	270 mm
c	430 mm	g	290 mm
d	560 mm	h	560 mm

Tolerance: ± 20 mm

Preset washer jets

The spray jets are preset. However, small differences in height may be corrected.

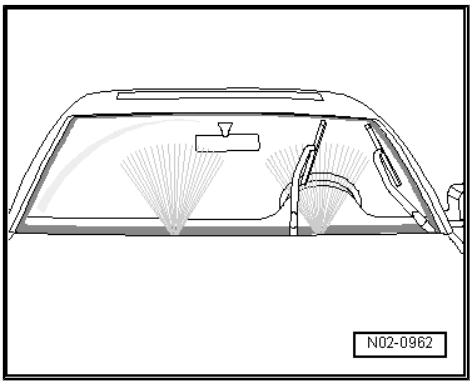

Note

Two different types of washer jets have been installed.

Protected by copyright. Copying for private or commercial purposes, in part or on whole, is not permitted unless authorised by Volkswagen AG. Volkswagen AG does not guarantee or accept any liability with respect to the correctness of information in this document. Copyright by Volkswagen AG.
satelettronica

– Turn eccentric on spray jet -in direction of arrow- using a screwdriver, to adjust spray direction upwards.

– To adjust the spray direction downwards, turn eccentric on washer jet opposite to -direction of arrow-.

or

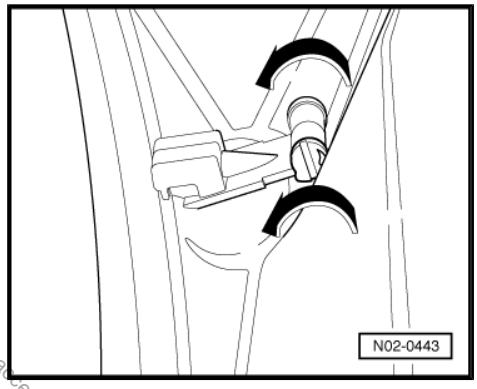

– If both spray fields are not at same height, adjust spray direction upwards or downwards as follows:

– Adjust spray jet at adjuster -1- by hand upwards or downwards.

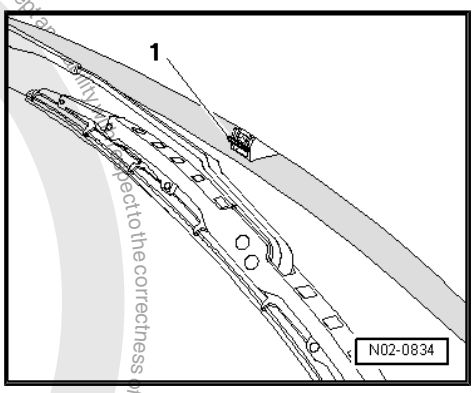

Spray jet for rear window washer system

Special tools and workshop equipment required

♦ Adjusting tool - T10127-

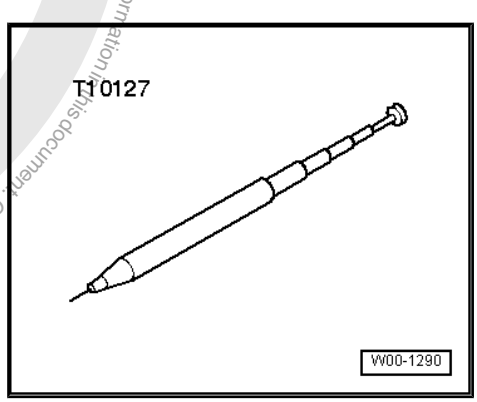

– Check jet setting.

Spray jet must spray to centre of wiped area.

– If necessary, adjust the spray jet using adjusting tool - T10127- .

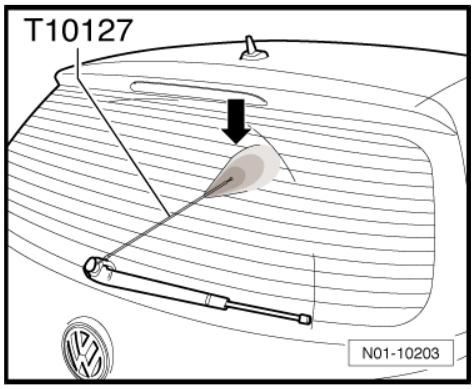

Protected by copyright. Copying for private or commercial purposes, in part or in whole, is not permitted unless authorised by Volkswagen AG. Volkswagen AG does not guarantee or accept any liability with respect to the correctness of information in this document. Copyright by Volkswagen AG.

satelettronica

4.33.3 Headlight washer system: checking jet setting, adjusting jets if necessary

Note

- *If the spray field is uneven due to soiling in the spray jet, remove spray jet, ⇒ Rep. gr. 92 and rinse with water opposite to direction of spray.*
- *Subsequent blowing through with compressed air against the spraying direction is permitted.*

Caution

- ***Never use items to clean the spray jets!***
- ***Never use a needle or a similar object to adjust the spray jets, otherwise the water passages in the spray jet will be damaged!***

Special tools and workshop equipment required

- Adjusting tool - T10167-

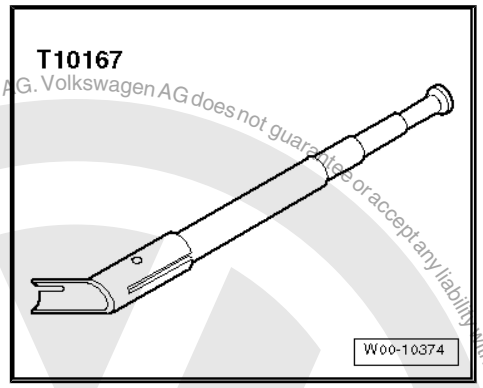

Headlight washer system: Check jet setting and adjust, vehicles ► 1999

Note

The jet adjustment dimensions are for the left-hand headlight (right-hand headlight mirror image)

Protected by copyright. Copying for private or commercial purposes, in part or whole, is not permitted unless authorised by Volkswagen AG. Volkswagen AG does not guarantee or accept any liability with respect to the correctness of information in this document. Copyright by Volkswagen AG.
satelettronica

The spray jets must be adjusted so that the water jets spray onto headlight at positions shown.

– Check jet setting.

a	15 mm from casting mark -arrow-
b	10 mm diameter

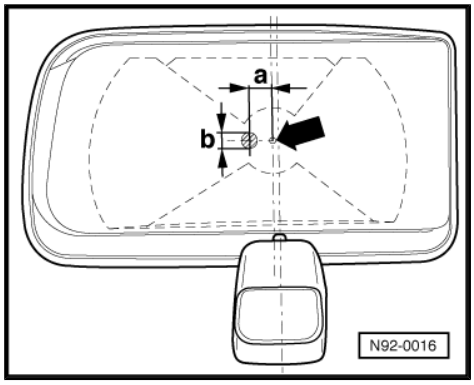

Note

Mark the points at which water strikes the headlight with a water-soluble pin.

– Align spray jet to relevant spray points using adjusting tool - T10167- .

Headlight washer system: Check jet setting and adjust, vehicles 2000 ►

Note

The jet adjustment dimensions are for the left-hand headlight (right-hand headlight mirror image)

The spray jets must be adjusted so that the water jets spray onto headlight at positions shown.

a - 70 mm

b - 75 mm

c - 90 mm

d - 75 mm

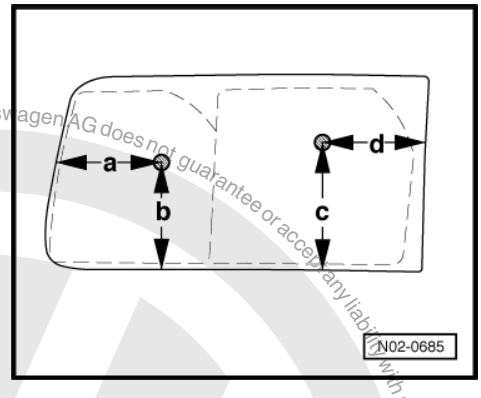

Switch off ignition and all electrical consumers and remove ignition key.

– Pull the washer jets and cap -arrow- out of bumper cover onto stop.

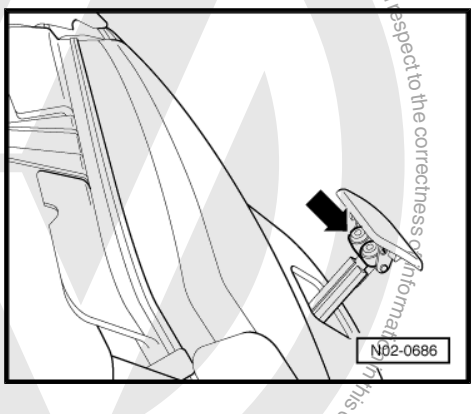

Note

Mark the points at which water strikes the headlight with a water-soluble pin.

– Align spray jet -arrow- to relevant spray points using adjusting tool - T10167- .

4.34 Wiper blades: checking park position and setting angle

Wiper blades: checking park position, adjust if necessary
⇒ page 83

Wiper blades: checking setting angle, adjust if necessary
⇒ page 83

Protected by copyright. Copying for private or commercial purposes, in part or in whole, is not permitted unless authorised by Volkswagen AG. Volkswagen AG does not guarantee or accept any liability with respect to the correctness of information in this document. Copyright by Volkswagen AG.
satelettronica

4.34.1 Wiper blades: checking park position, adjusting if necessary

Special tools and workshop equipment required

- Torque wrench - V.A.G 1331-

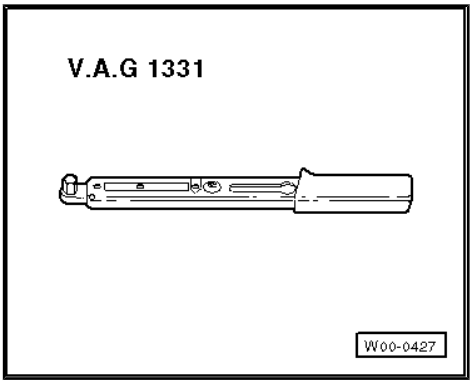

4.34.2 Windscreen

– Check park position.

– Check if wiper blades are in park position on markings in the windscreen.

a - Markings for left-hand drive vehicles

b - Markings for right-hand drive vehicles

– Adjust park position by moving wiper arm if necessary.

Wiper arm torque setting: 20 Nm

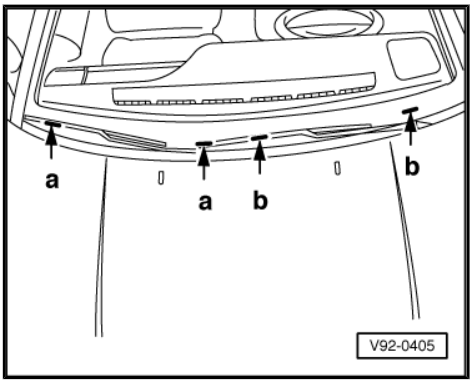

4.34.3 Rear windscreen

– Check park position.

The distance -a- between wiper blade and lower edge of windscreen must be 35 mm.

– Adjust park position by moving wiper arm if necessary.

Specified torque for wiper arm: 15 Nm

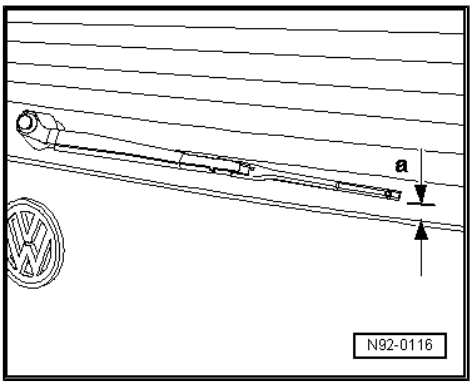

4.34.4 Wiper blades: checking setting angle, adjusting if necessary

Note

Check setting angle only if wiper blades judder or make noises.

Special tools and workshop equipment required

Protected by copyright. Copying for private or commercial purposes, in part or in whole, is not permitted unless authorised by Volkswagen AG. Volkswagen AG does not guarantee or accept any liability with respect to the correctness of information in this document. Copyright by Volkswagen AG.
satelettronica

♦ Adjusting tool - 3358 B-

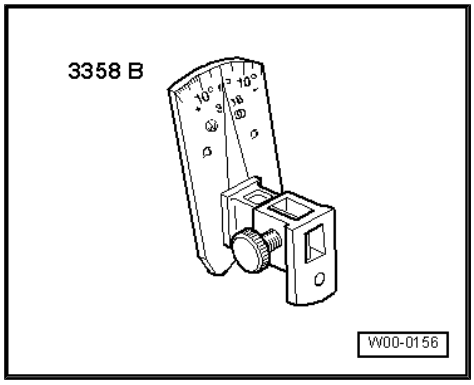

Carry out following procedure:

– Set wiper arms to rest position.

– Remove wiper blade.

– Insert wiper arm -2- into setting device - 3358 B- and secure with locking screw -3-.

– Check setting angle.

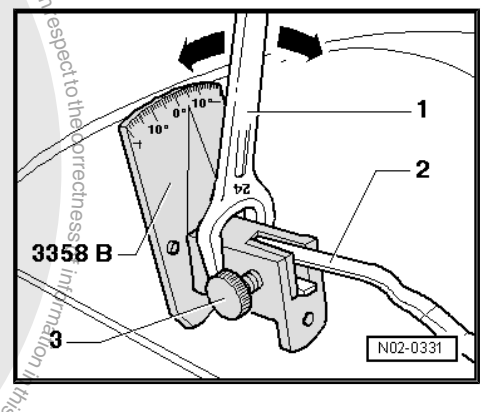

Contact angle (specifications) for		
	LHD vehicles	RHD vehicles
Driver side	- 2°	+ 2°
Passenger side	- 2°	+ 2°
Rear window wiper[9)]	0°	0°
Tolerance	± 2°	± 2°

9) from chassis number 6N-S-045 001 plastic wiper arm. Adjustment is not possible.

Adjust setting angle to specification, if required, as follows:

– Fit 24 mm combination spanner - VAS 5397- -1- on setting device - 3358 B- and adjust wiper arm -2- to specification -arrows-.

– Loosen wiper arm -2- from setting device - 3358 B- and again secure with locking screw -3-.

– Check setting against table. If necessary, repeat setting and checking procedure until angle is as specified.

– Remove setting device - 3358 B- and fit wiper blade.

– Check that wiper system wipes without juddering.

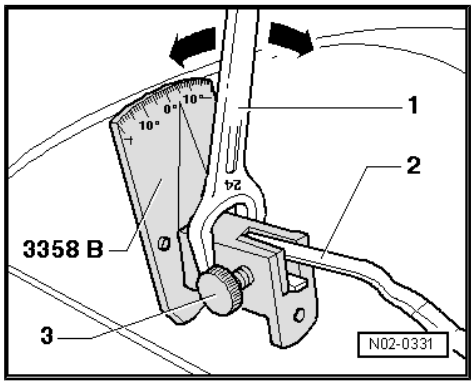

4.35 Power assisted steering: checking fluid level

Carry out following procedure:

4.35.1 Cold fluid:

– Do not start engine but bring front wheels to straight-ahead position.

Protected by copyright. Copying for private or commercial purposes, in part or in whole, is not permitted unless authorised by Volkswagen AG. Volkswagen AG does not guarantee or accept any liability with respect to the correctness of information in this document. Copyright by Volkswagen AG.

satelettronica

– Fit a suitable screwdriver into cap recess -arrow- and unscrew cap with oil dipstick.
– Wipe off dipstick using a clean cloth.
– Screw filler cap on hand tight and unscrew again.

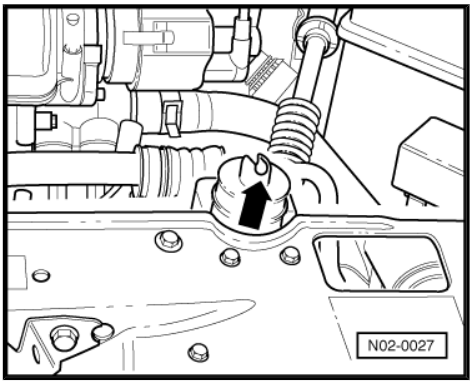

Note

The cap must be fully screwed on in order to obtain an accurate fluid level reading.

For dipstick as illustrated:

– Check fluid level: The fluid level must be in area of MIN. marking (up to 2 mm above or below marking).

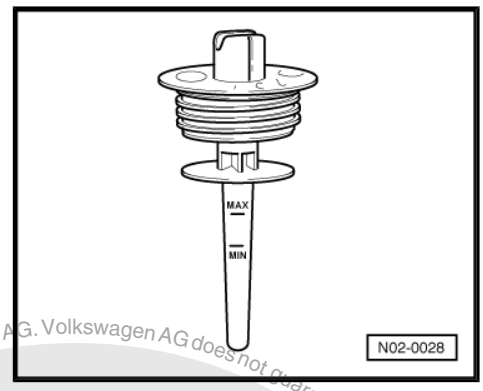

For dipstick as illustrated:

– Checking oil level: The oil level must be within the area of the grid -A-.

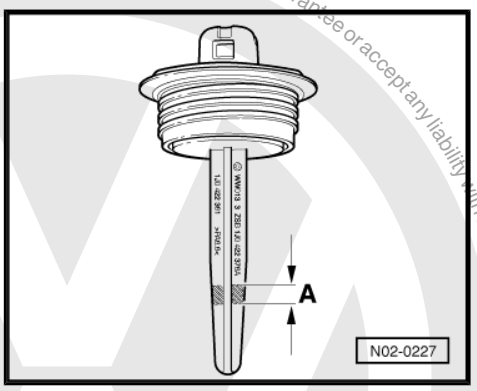

Note

- *If fluid level is above specified range, fluid must be extracted.*
- *If fluid level is below above-mentioned area, hydraulic system must be checked for leaks (repair measure). It is not sufficient just to top up with fluid. If the hydraulic system is not leaking, replenish power assisted steering oil - G 002 000- .*

– Screw cap on hand tight (with a screwdriver).

4.35.2 Fluid at operating temperature (above approx. 50°C)

– Do not start engine but bring front wheels to straight-ahead position.
– Fit a suitable screwdriver into cap recess -arrow- and unscrew cap with oil dipstick.
– Wipe off dipstick using a clean cloth.
– Screw filler cap on hand tight and unscrew again.

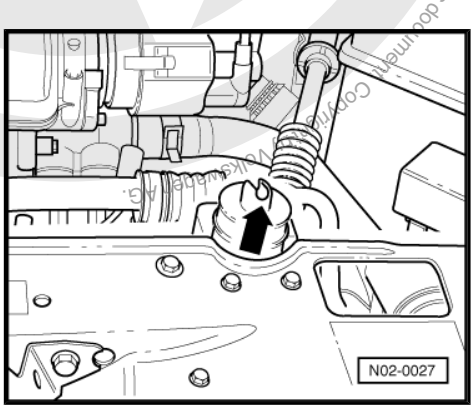

Note

The cap must be fully screwed on in order to obtain an accurate fluid level reading.

Protected by copyright. Copying for private or commercial purposes, in whole or in part, is not permitted unless authorised by Volkswagen AG. Volkswagen AG does not guarantee or accept any liability with respect to the correctness of information in this document. Copyright by Volkswagen AG.
satelettronica

For dipstick as illustrated:

– Check fluid level: The fluid level must be between MIN. and MAX. marking.

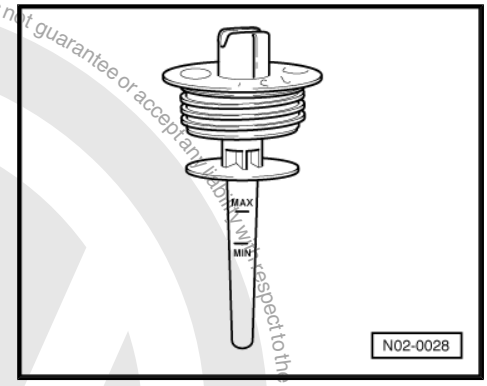

For dipstick as illustrated:

– Checking oil level: The oil level must be between min. and max. markings.

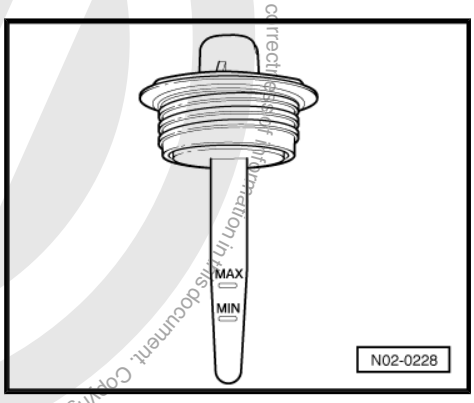

Note

- *If oil level is above max. marking, the excessive oil must be extracted.*
- *If oil level is below min. marking, the hydraulic system must be checked for leaks (repair measure). It is not sufficient just to top up with fluid. If the hydraulic system is not leaking, replenish power assisted steering oil - G 002 000- .*

– Screw cap on hand tight (with a screwdriver).

4.36 Service interval display: resetting

Service interval display: resetting, vehicles ►1997 ⇒ page 86

Service interval display: resetting, vehicles 1998 ► ⇒ page 88

4.36.1 Service interval display: resetting in vehicles ►1997

- Vehicles with diesel engine code AEF are fitted with a flexible service interval display ⇒ page 87 .
- Vehicles with SDI and petrol engine are »not« fitted with a flexible interval display ⇒ page 87 .

Protected by copyright. Copyright by Volkswagen AG. Volkswagen AG does not guarantee or accept any liability with respect to the correctness of information in this document. Copyright by Volkswagen AG. Reproduction, in whole or in part, is not permitted unless authorised by Volkswagen AG. Volkswagen AG does not guarantee or accept any liability with respect to the correctness of information in this document. Copyright by Volkswagen AG.
satelettronica

4.36.2 Non-flexible display

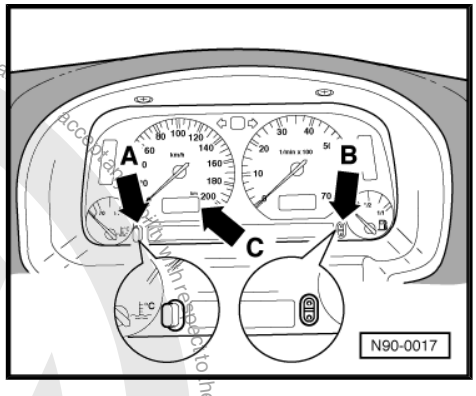

After switching on the ignition (engine does not operate) the display -arrow C- appears for a few seconds in place of the odometer display in the speedometer. If service is not required, “IN-00” will be displayed.

If a service is due, also after starting the engine the following display flashes for approx. 3 seconds (service):

OIL	Engine oil change or
IN 01	Inspection service every 12 months or
IN 02	Inspection service every 30,000 km

After a service has been performed, service types which appear in the display before that one, must also be called-up individually and reset:

- If the inspection service IN 02 has been performed, OIL, IN01 and IN 02 must be reset.
- If the inspection service IN 01 has been performed, OIL and IN 01 must be reset.

Reset the display as follows:

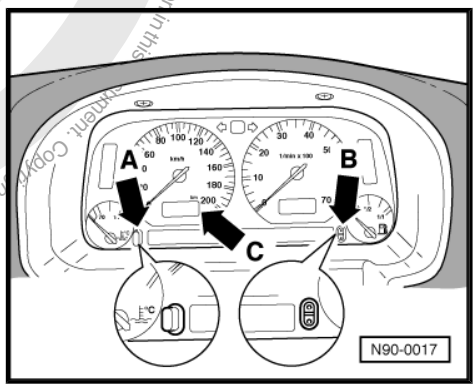

– With ignition switched on press button arrow A below the speedometer and hold.
– Switch off ignition and release button. The inscription “OIL” is indicated in the display.
– Press the lower of both buttons -arrow B- of digital clock until five dashes are indicated (- - - - -). Only then the service is reset.
– By pressing the button again arrow A, below the speedometer, the other services are indicated and can be reset individually.
– Switch on ignition and if “IN 00” appears, switch off.

4.36.3 Flexible display

With the flexible service interval display, in addition to the odometer and clock, the thermal load and soot load of engine oil are monitored electronically and used for calculating the service intervals.

Depending on vehicle operating conditions (driving style and engine load) the next oil change service may be due at distances between 7,500 and 15,000 km or periods between 8 and 12 months.

On the flexible service interval display other display contents will be indicated compared with the non-flexible service interval display.

After the ignition is switched on, the display appears for a few seconds in place of the odometer display in the distance display.

If service is not required, “INSP-0” will be indicated.

If a service is due, also after starting the engine the following display flashes for approx. 3 seconds (service):

Indicated on display:	Service event:
alternately OIL or INSP	Engine oil change
or:	

satelettronica

Indicated on display:	Service event:
INSP-1	Inspection service every 12 months
or:	
INSP-2	Inspection service every 30,000 km

After a service has been performed, also the previous type of service must be called-up individually and reset.

- ♦ If inspection service INSP-2 has been performed, OIL, INSP-1 and INSP-2 must be reset.
- ♦ If the inspection service INSP-1 has been performed, OIL and INSP-1 must be reset.

Reset the display as follows:

– With ignition switched on press button arrow A below the speedometer and hold.

– Switch off ignition and release button. The inscription “OIL” is indicated in the display.

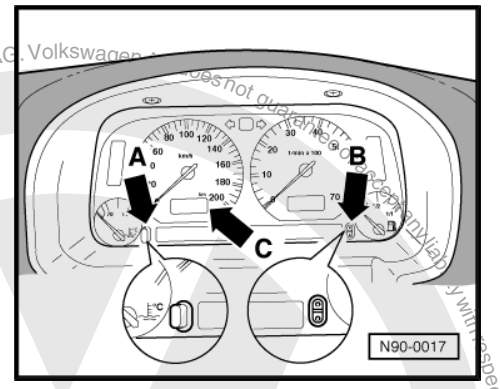

– Press the lower of both buttons -arrow B- of digital clock until five dashes are indicated (- - - - -). Only then the service is reset.

– By pressing the button again arrow A, below the speedometer, the other services are indicated and can be reset individually.

– Switch on ignition and if “IN 00” appears, switch off.

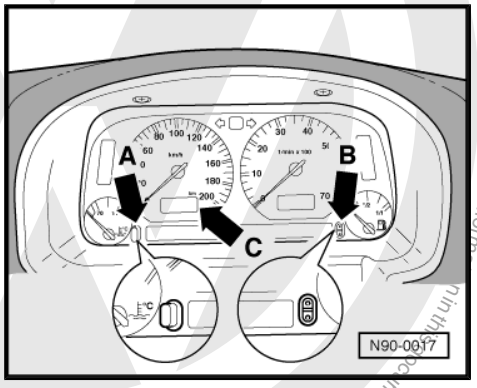

4.36.4 Service interval display: resetting, vehicles 1998►

Functional description

The service interval display electronics is comprised of, amongst other items:

- ♦ a time recorder

and

- ♦ two distance recorders.

The electronics evaluates both recorders so that the customer

- ♦ after a predetermined time period is exceeded or

or

- ♦ after a predetermined distance is reached

Protected by copyright. Copying for private or commercial purposes, in part or in whole, is not permitted unless authorised by Volkswagen AG. Volkswagen AG does not guarantee or accept any liability with respect to the correctness of information in this document. Copyright by Volkswagen AG.
satelettronica

is informed via the service interval display that a service is required (whichever occurs first).

Note

On vehicles 1998➤ with engine code AEF, the thermal load and soot load of engine oil are additionally used for calculating the service intervals.

Note

After the engine is started the display switches back to "service" after 3 minutes.

Protected by copyright. Copyright for private or commercial purposes, in part or in whole, is not permitted unless authorised by Volkswagen AG. Volkswagen AG does not guarantee or accept any liability with respect to the correctness of information in this document. Copyright by Volkswagen AG.

satelettronica

Service interval display

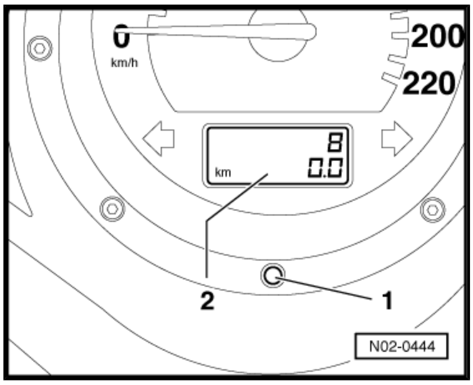

Between services, only the total distance and distance travelled (trip recorder) is shown in the distance display -2-.

If a service is due, the following is indicated in the distance display -2- below the total mileage:

- with ignition switched off “service”.
- after the ignition is switched on and up to 3 minutes after the engine is started the type of service (see table).

Indicated on display:	Service event:
Distance and service OIL	Oil change service every 15,000 km
or:	
Distance and service INSP	Inspection service every 12 months or every 30,000 km (whichever occurs first)

One or both service types must be reset depending on which service was completed, therefore:

- If a “service OIL” (oil change service every 15,000 km) is carried out, only “service OIL” must be reset.
- If a “service INSP” (inspection service every 12 months or every 30,000 km) has been performed “service INSP” and “service OIL” must be reset.
- If a “service INSP” (inspection service every 12 months or every 30,000 km) without an oil change has been performed, then only “service INSP” must be reset.

Resetting service interval display

Note

- *The service interval display can be reset using different methods:*
- *With adjustment button for distance display on dash panel insert ⇒ page 90*
- *With diagnostic tester ⇒ page 92*

Resetting service interval display with adjustment button for distance display on dash panel insert

With adjustment button for distance display on dash panel insert, vehicles ►09.99 ⇒ page 90

With adjustment button for distance display on dash panel insert, vehicles 10.99► ⇒ page 91

With adjustment button for distance display on dash panel insert, vehicles ►09.99

For

- delivery inspection
- every oil change service
- every inspection service

service interval display must be reset.

Protected by copyright. Copying for private or commercial purposes, in part or in whole, is not permitted unless authorised by Volkswagen AG. Volkswagen AG does not guarantee or accept any liability with respect to the correctness of information in this document. Copyright by Volkswagen AG.

satelettronica

Note

Each service must be reset individually as only the distance recorder and time counter of the actual service can be reset.

Reset the display as follows:

– Switch off ignition.

– Press and hold button 1 next to speedometer.

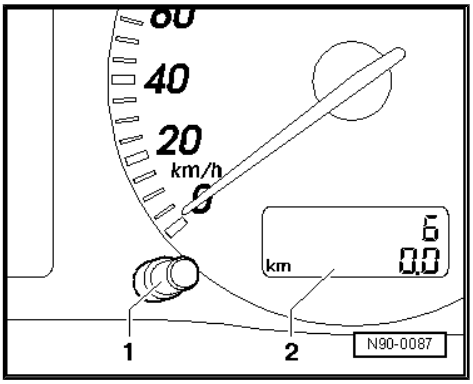

– Switch on ignition and hold button 1 depressed (min. 10 seconds) until three dashes (- - -) or the next service appears in the display. Only then the service is reset.

– Release button 1.

– Switch off ignition.

After resetting the service interval display the previous trip recorder display is indicated again.

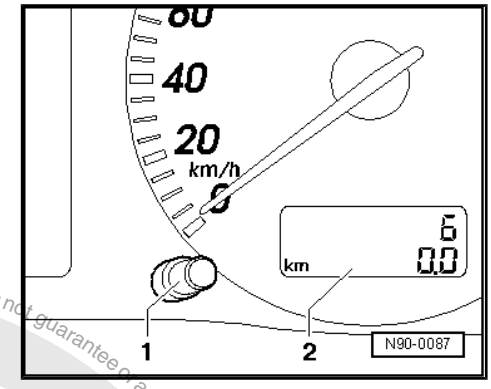

Note

- *Note that only the actual service type indicated on display can be reset.*
- *To reset a further service, repeat these steps.*

With adjustment button for distance display on dash panel insert, vehicles 10.99►

For

- every oil change service
- every inspection service

service interval display must be reset.

Note

- *For delivery inspection it is not possible to reset the service interval display with the adjustment button for the trip recorder in dash panel insert.*
- *Each service must be reset individually as only the distance recorder and time counter of the actual service can be reset.*

Reset the display as follows:

– Switch off ignition.

Protected by copyright. Copying for private or commercial purposes, in part or in whole, is not permitted unless authorised by Volkswagen AG. Volkswagen AG does not guarantee or accept any liability with respect to the correctness of information in this document. Copyright by Volkswagen AG.
satelettronica

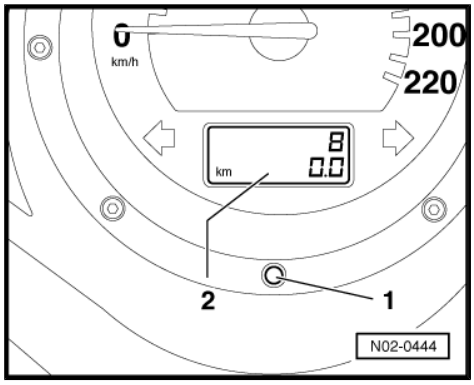

– Press and hold button 1 below the distance display.

– Switch on ignition and hold button 1 depressed (min. 10 seconds) until three dashes (- - -) or the next service appears in the display. Only then the service is reset.

– Release button 1.

– Switch off ignition.

After resetting the service interval display the previous trip recorder display is indicated again.

Note

- *Note that only the actual service type indicated on display can be reset.*
- *To reset a further service, repeat these steps.*

4.36.5 Service interval display: resetting with vehicle diagnostic tester

For

- delivery inspection
- every oil change service
- every inspection service

service interval display must be reset.

– Apply handbrake.

– Automatic gearbox: Move selector lever to position “P” or “N”.

– Manual gearbox: gear lever in neutral.

– Connect vehicle diagnostic tester ⇒ page 20 .

Resetting service interval display ⇒ page 92

Adaption table ⇒ page 94

Resetting service interval display

Select operating mode:

– Press button for »Vehicle self-diagnosis« on display -arrow-.

Note

If the display is not as shown in the procedure: ⇒ Operating instructions for diagnostic tester

Protected by copyright. Copyright by Volkswagen AG. Copying for private or commercial purposes, in part or in whole, is not permitted unless authorised by Volkswagen AG. Volkswagen AG does not guarantee or accept any liability with respect to the correctness of information in this document.
satelettronica

Indicated on display:

Select vehicle system:

– Press “17 - Dash panel insert” on display -arrow-.

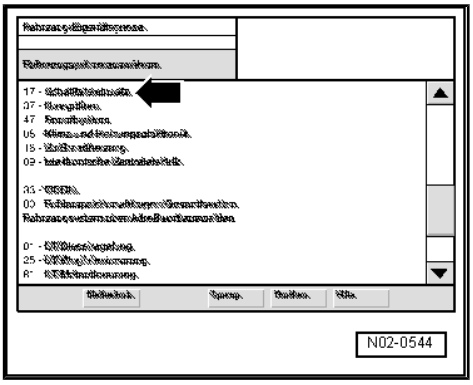

Indicated on display:

The control unit identification and coding are displayed -arrow-.

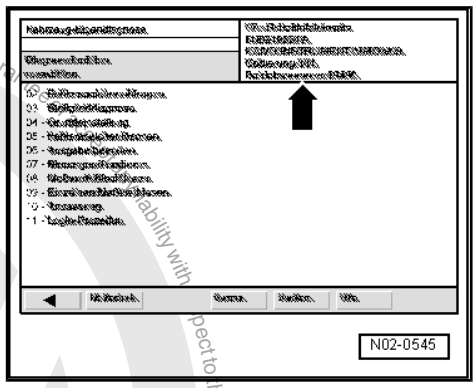

Indicated on display:

– Press “10 - Adaption” on display -arrow-.

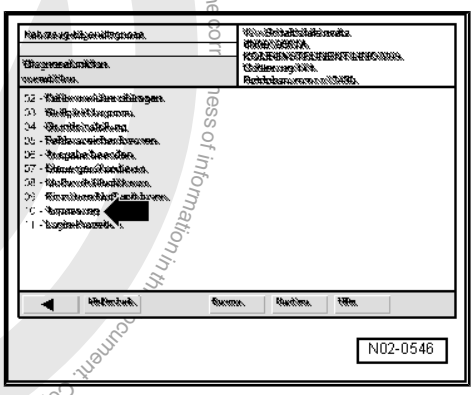

Protected by copyright. Copying for private or commercial purposes, in part or in whole, is not permitted unless authorised by Volkswagen AG. Volkswagen AG does not guarantee the accuracy of information in this document. Copyright by Volkswagen AG.
satelettronica

Indicated on display:

– Press the adaption channel for the service which is to be reset on the display number block -arrow-:

for display “service OIL” on dash panel insert channel 10

for display “service INSP” on dash panel insert channel 10, 11 and 12

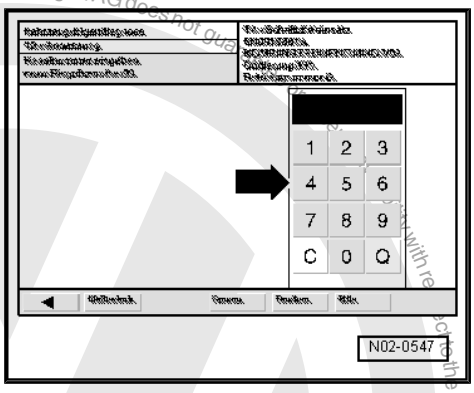

Adaption table:

Service event:	Adaption channel:	Counter contents:	Adaption value to reset:
service OIL	10	Distance in 100s of km	150
service INSP	11	Distance in 100s of km	300
service INSP	12	Time in days	360

Note

- *Entering the relevant adaption values for the distance recorder is only possible in steps of 100 km. Therefore this is shown on the display in 100 km.*
- *The entered values count down to 0 km.*
- *The procedure is the same for vehicles with a distance display in miles. This means that the same adaption figures (numbers) should be entered as for a distance display in kilometres.*
- *The counter for “INSP service” can be adapted to max. 360 days.*

Resetting service interval display

service OIL (oil change service) ⇒ page 94

service INSP (inspection every 12 months) ⇒ page 95

service INSP (inspection every 30,000 km) ⇒ page 97

service OIL (oil change service)

Indicated on display:

– Press buttons 1 and 0 on display number block -arrow-.

– Confirm entry with Q key on display number block.

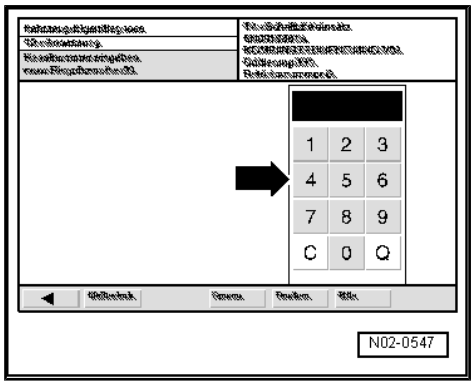

Copyright by Volkswagen AG. Volkswagen AG does not guarantee the correctness of information in this document. Copyright by Volkswagen AG. Copying for private or commercial purposes, in part or in whole, is not permitted unless authorised by Volkswagen AG.
satelettronica

Indicated on display:

– Move the position indicator -arrow- on the display until 150 is displayed over the scroll bar -1- (equates to 15 000 km).

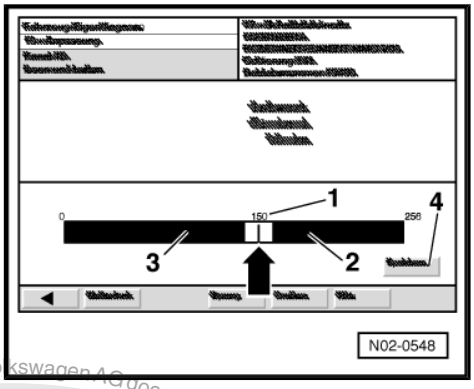

Note

- *Pressing the scroll bar briefly to the right -2- of the position indicator moves the value to the next number.*
- *Pressing the scroll bar briefly on the left -3- of the position indicator moves the value to the previous number.*

– Press the Save button on display -4-.

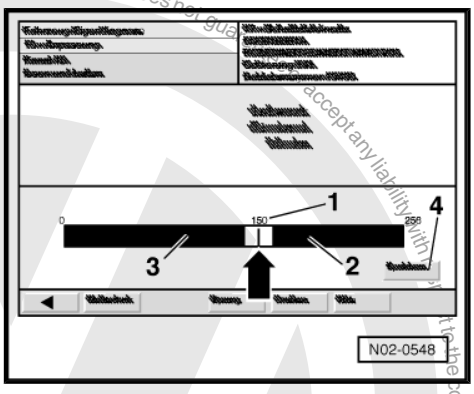

Note

The procedure is the same for vehicles with a distance display in miles. This means that the same adaption figures (numbers) should be entered as for an distance display in kilometres.

Indicated on display:

– Press the Accept button on display -arrow-.

– End output .

Service INSP (inspection every 12 months)

Indicated on display:

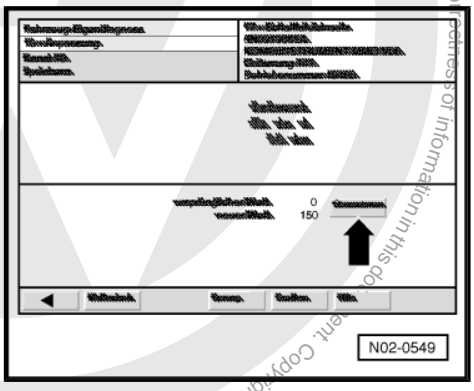

– Press buttons 1 and 2 on display number block -arrow-.

– Confirm entry with Q key on display number block.

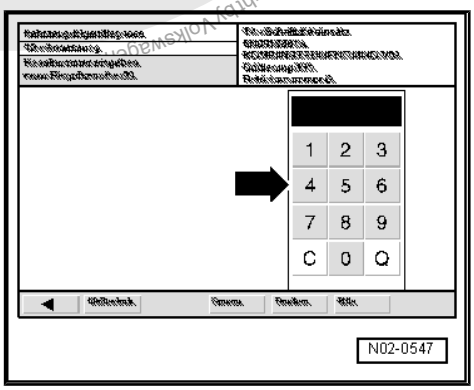

Protected by copyright. Copying for private or commercial purposes, in part or in whole, is not permitted unless authorised by Volkswagen AG. Volkswagen AG does not give any warranty nor accept any liability with respect to the correctness or completeness of information in this document. Copyright by Volkswagen AG.
satelettronica

Indicated on display:

– Move the position indicator -arrow- on the display until -1- 360 is displayed over the scroll bar (equates 360 days).

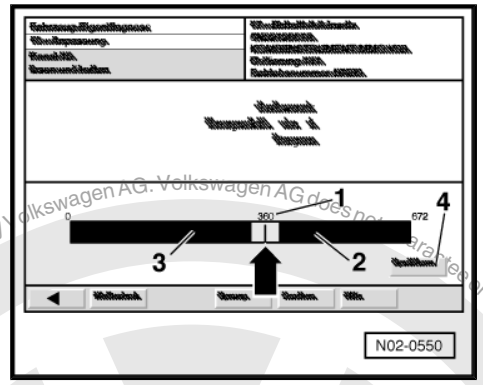

Note

- *Pressing the scroll bar briefly to the right -2- of the position indicator moves the value to the next number.*
- *Pressing the scroll bar briefly on the left -3- of the position indicator moves the value to the previous number.*

– Press the Save button on display -4-.

Indicated on display:

– Press the »Accept« button on display -arrow-.

If an inspection service has been performed without an oil change, then end output ⇒ page 101 .

If an inspection service has been performed with an oil change, then continue as described:

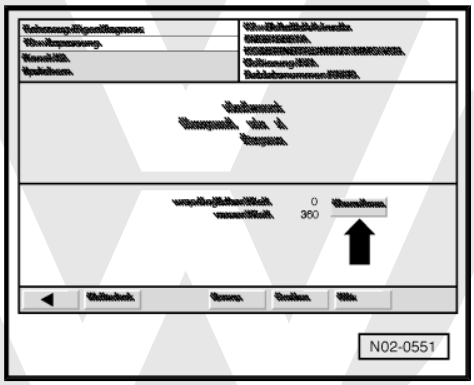

Indicated on display:

– Press arrow button on display.

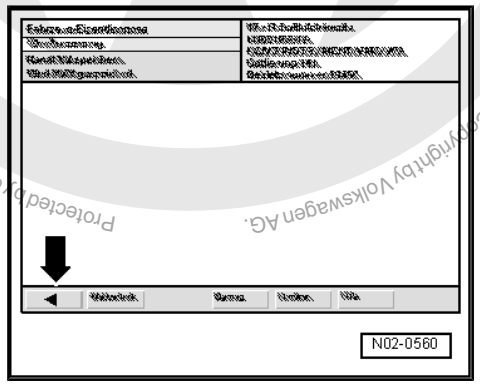

Indicated on display:

– Press “10 - Adaption” on display -arrow-.

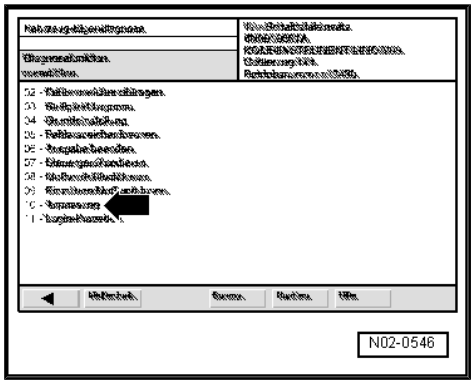

Protected by copyright. Copying for private or commercial purposes, in part or in whole, is not permitted unless authorised by Volkswagen AG. Volkswagen AG does not guarantee or accept any liability with respect to the correctness of information in this document. Copyright by Volkswagen AG.
satelettronica

Indicated on display:

– Press buttons 1 and 0 on display number block -arrow-.

– Confirm entry with Q key on display number block.

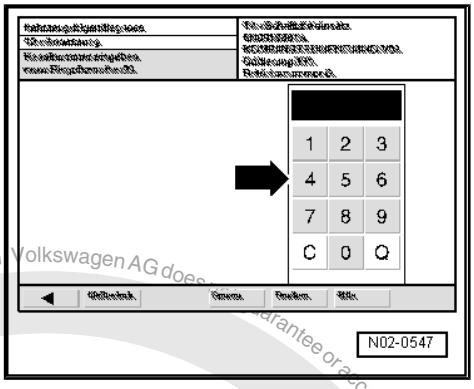

Indicated on display:

– Move the position indicator -arrow- on the display until 150 is displayed over the scroll bar -1- (equates to 15 000 km).

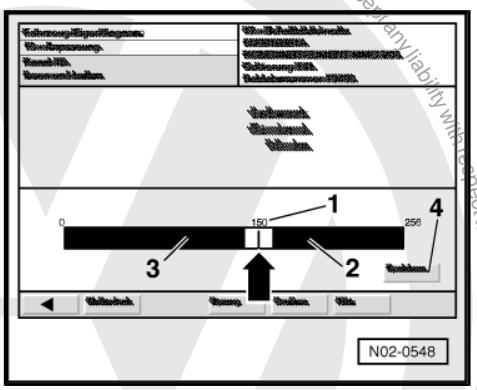

Note

- *Pressing the scroll bar briefly to the right -2- of the position indicator moves the value to the next number.*
- *Pressing the scroll bar briefly on the left -3- of the position indicator moves the value to the previous number.*

– Press the Save button on display -4-.

Note

The procedure is the same for vehicles with a distance display in miles. This means that the same adaption figures (numbers) should be entered as for an distance display in kilometres.

Indicated on display:

– Press the Accept button on display -arrow-.

– End output ⇒ page 101 .

Service INSP (inspection every 30,000 km)

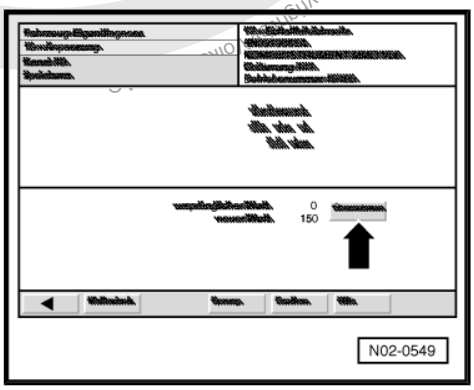

Indicated on display:

– Press buttons 1 and 1 on display number block -arrow-.

– Confirm entry with Q key on display number block.

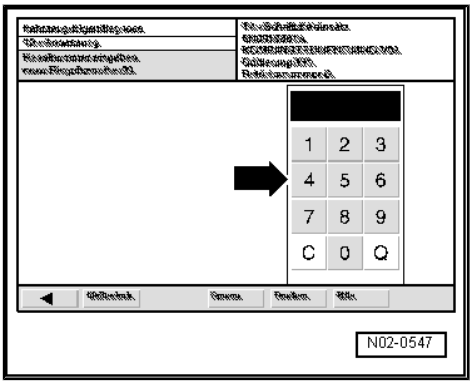

Protected by copyright. Copying for private or commercial purposes, in part or in whole, is not permitted unless authorised by Volkswagen AG. Volkswagen AG does not guarantee or accept any liability with respect to the correctness of information in this document. Copyright by Volkswagen AG.
satelettronica

Indicated on display:

– Move the position indicator -arrow- on the display until 300 is displayed over the scroll bar -1- (equates to 30,000 km).

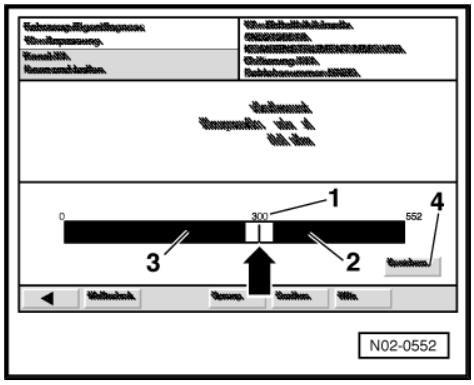

Note

- *Pressing the scroll bar briefly to the right -2- of the position indicator moves the value to the next number.*
- *Pressing the scroll bar briefly on the left -3- of the position indicator moves the value to the previous number.*

– Press the Save button on display -4-.

Note

The procedure is the same for vehicles with a distance display in miles. This means that the same adaption figures (numbers) should be entered as for an distance display in kilometres.

Indicated on display:

– Press the Accept button on display -arrow-.

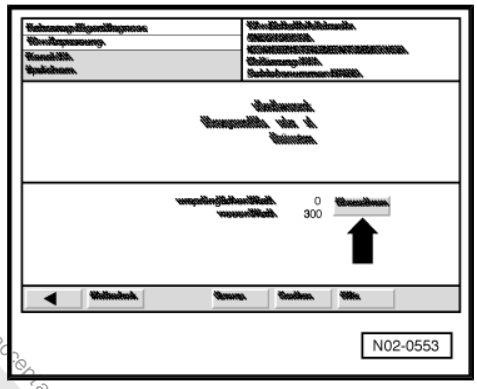

Indicated on display:

– Press arrow button on display.

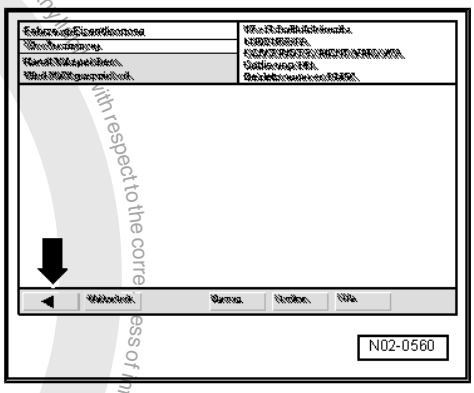

Indicated on display:

– Press “10 - Adaption” on display -arrow-.

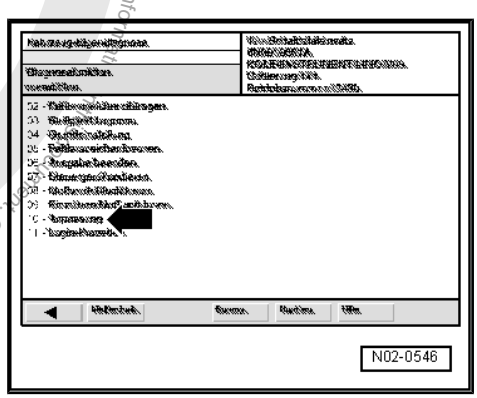

Protected by copyright. Copying for private or commercial purposes, in part or in whole, is not permitted unless authorised by Volkswagen AG. Volkswagen AG does not guarantee or accept any liability with respect to the correctness of information. Copyright by Volkswagen AG.

satelettronica

Indicated on display:

– Press buttons 1 and 2 on display number block -arrow-.

– Confirm entry with Q key on display number block.

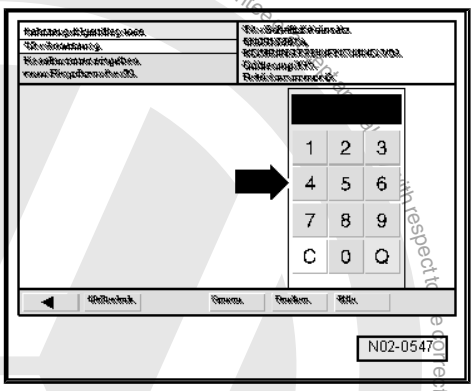

Indicated on display:

– Move the position indicator -arrow- on the display until -1- 360 is displayed over the scroll bar (equates 360 days).

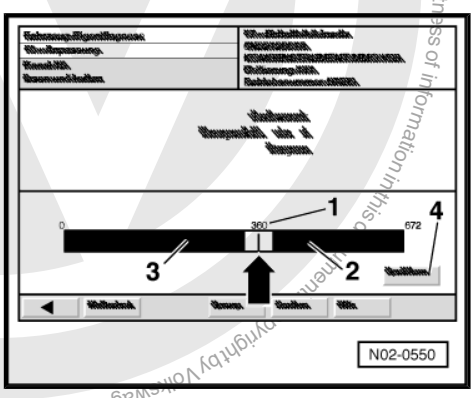

Note

- *Pressing the scroll bar briefly to the right -2- of the position indicator moves the value to the next number.*
- *Pressing the scroll bar briefly on the left -3- of the position indicator moves the value to the previous number.*

– Press the Save button on display -4-.

Indicated on display:

– Press the Accept button on display -arrow-.

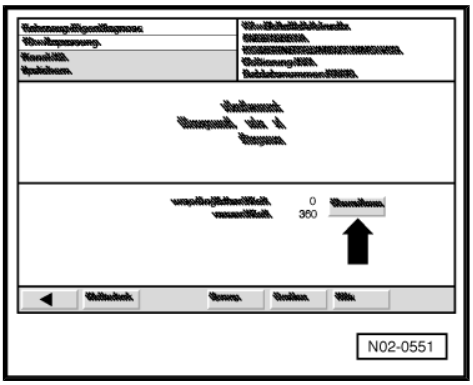

Indicated on display:

– Press arrow button on display.

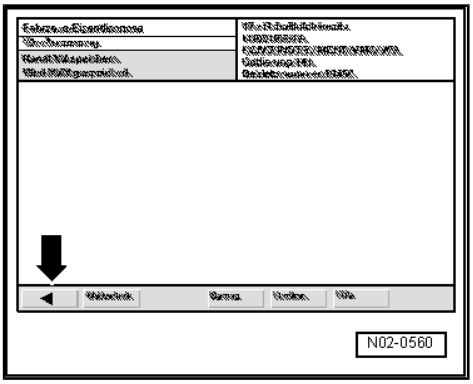

Protected by copyright. Copying for private or commercial purposes, in part or in whole, is not permitted unless authorised by Volkswagen AG. Volkswagen AG does not guarantee the correctness of information in this document with respect to copyright by Volkswagen AG.
satelettronica

Indicated on display:

– Press “10 - Adaption” on display -arrow-.

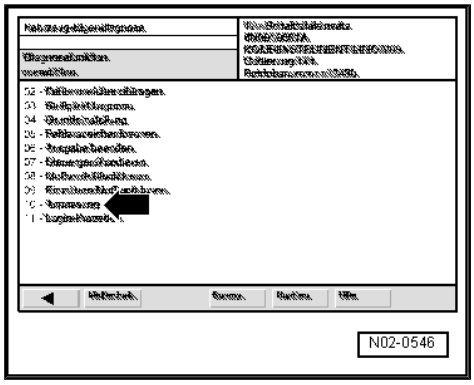

Indicated on display:

– Press buttons 1 and 0 on display number block -arrow-.

– Confirm entry with Q key on display number block.

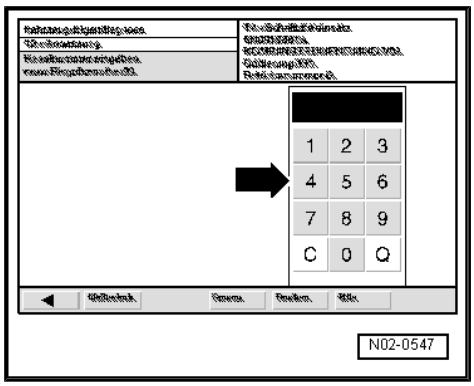

Indicated on display:

– Move the position indicator -arrow- on the display until 150 is displayed over the scroll bar -1- (equates to 15 000 km).

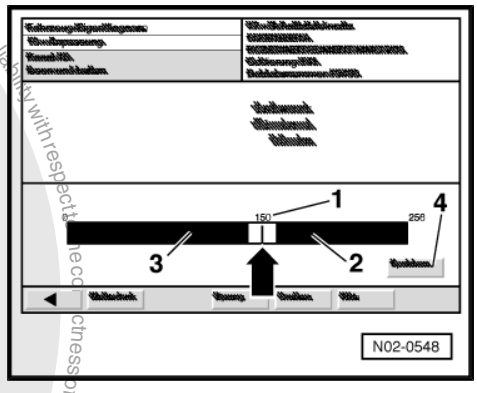

Note

- *Pressing the scroll bar briefly to the right -2- of the position indicator moves the value to the next number.*
- *Pressing the scroll bar briefly on the left -3- of the position indicator moves the value to the previous number.*

– Press the Save button on display -4-.

Note

The procedure is the same for vehicles with a distance display in miles. This means that the same adaption figures (numbers) should be entered as for an distance display in kilometres.

Indicated on display:

– Press the Accept button on display -arrow-.

– End output.

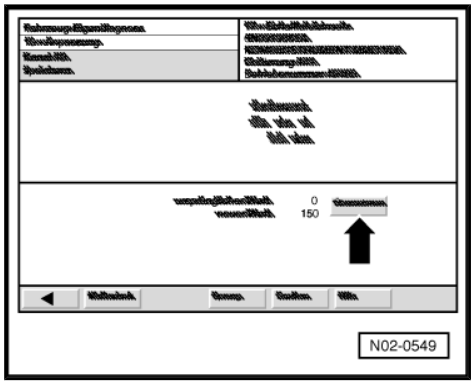

satelettronica

Indicated on display:

– Press GoTo button on display -arrow-.

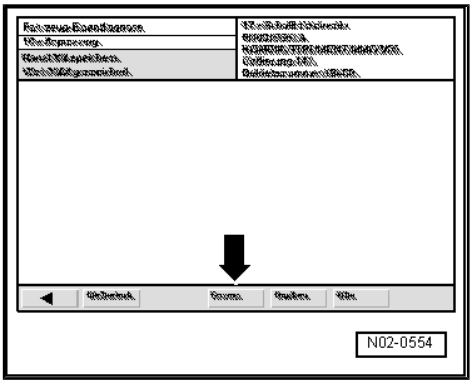

Indicated on display:

– Press End button on display -arrow-.

– Press End button in End menu.

– Switch off ignition and separate diagnosis connections.

– Switch on ignition.

After the ignition is switched on, the type of service is no longer displayed in the distance display in the dash panel insert.

The service interval display is now reset.

– Switch off ignition.

– Install cover in front of fuse strip.

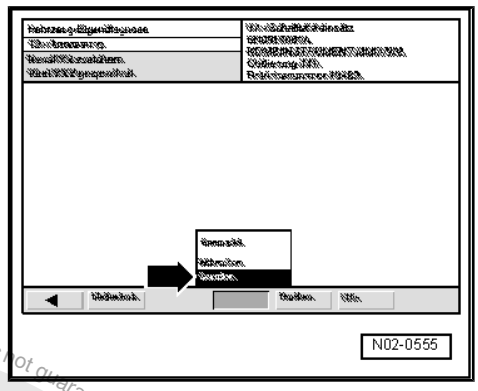

4.37 Track rod ends: checking clearance, firm seating and boots

Carry out following procedure:

– With vehicle raised (wheels hanging free), check play by moving track rods -arrow- and wheels. Clearance: zero clearance

– Check attachment.

– Check boots are not damaged and are seated correctly.

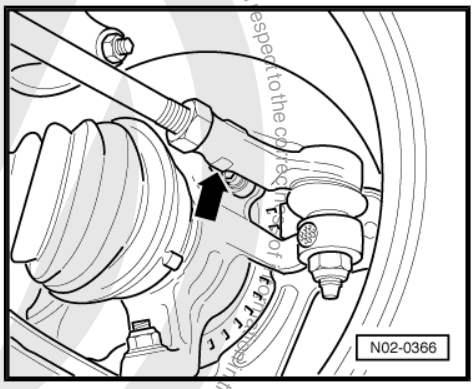

4.38 Dust and pollen filter: renewing filter element

The filter is located on right in the plenum chamber under a cover.

Carry out following procedure:

Protected by copyright. Copying for private or commercial purposes, in part or in whole, is not permitted unless authorised by Volkswagen AG. Volkswagen AG does not guarantee or accept any liability with respect to the correctness of this document. Copyright by Volkswagen AG.
satelettronica

4.38.1 Removing:

– From the right-hand side of plenum chamber cover pull rubber seal -1- off upwards to vehicle centre.

– Unclip plenum chamber cover -2- -arrows- and pull out upwards.

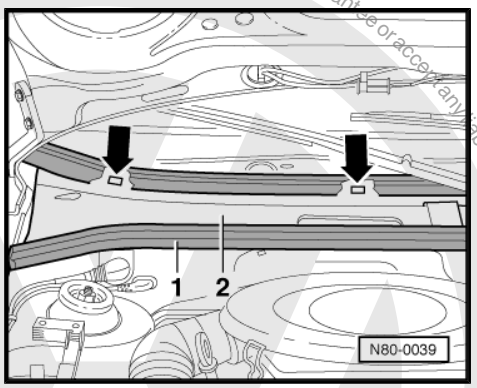

– Press filter housing lugs -B- in direction of arrow and take filter element with frame out upwards.

– Separate filter element from frame.

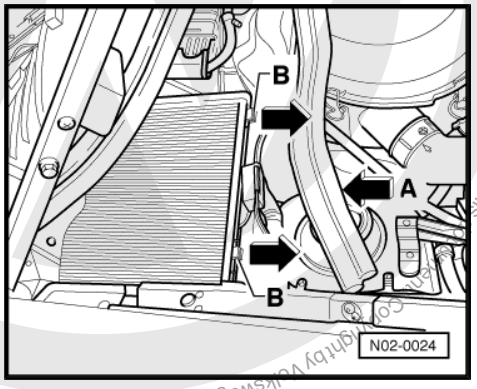

Note

Please observe disposal instructions!

4.38.2 Installing:

– Guide frame -A- on left and right into the first lamination of the new filter element -arrows B-.

– Guide frame lugs -C- into filter housing recesses -D- and press frame with filter element downwards.

– Clip in plenum chamber cover and press on rubber seal.

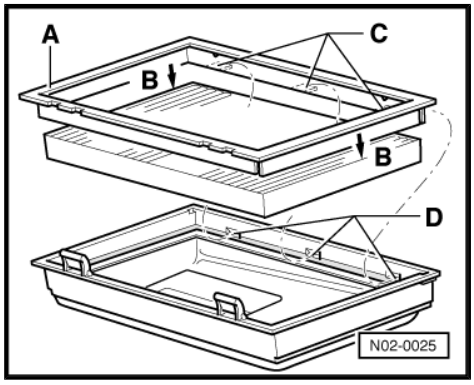

4.39 Door arrester: lubricating

Carry out following procedure:

– Grease door arrester and securing pin at points shown -arrows-.

– Grease door arrester in side area -arrow A- with solid grease - G 000 150- .

– Grease securing pins -arrow B- with lock cylinder lubricant spray - G 052 778 A2- .

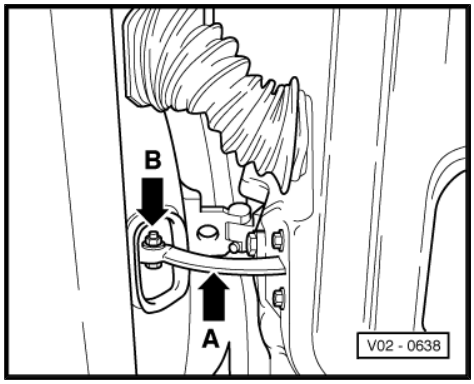

Protected by copyright. Copying for private or commercial purposes, in part or in whole, is not permitted unless authorised by Volkswagen AG. Volkswagen AG does not guarantee or accept any liability with respect to the correctness of information in this copy. Copyright by Volkswagen AG.
satelettronica

Protected by copyright. Copyright by Volkswagen AG. Volkswagen AG does not guarantee or accept any liability with respect to the correctness of information in this document. Copyright by Volkswagen AG. Volkswagen AG authorised by Volkswagen AG. Volkswagen AG does not guarantee or accept any liability with respect to the correctness of information in this document. Copyright by Volkswagen AG.

4.40 Clock: setting to correct time

4.40.1 Vehicles ► 1997

Carry out adjustment as follows:

To set the time there are two press buttons -arrow B- in lower right of dash panel insert. The hours are set with the upper button, the minutes are set with the lower button.

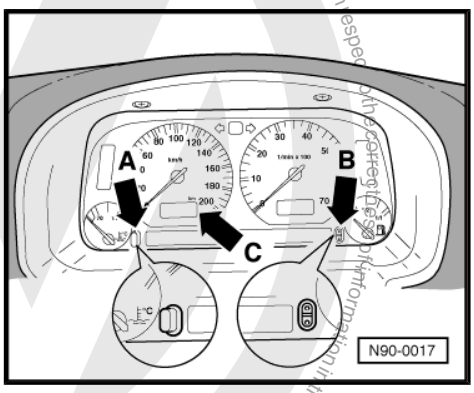

Setting hours:

– Press briefly, preferably with a ball pen on upper button, to advance the time one hour. Pressing the button continuously speeds up selection of hours.

Setting minutes:

– Press briefly, preferably with a ball pen on lower button, to advance the time one minute. Pressing the button continuously speeds up selection of minutes.

With the minute button the clock can be set exactly to the second:

– Press button until time is one minute before time to be set. Turn button at the moment when the seconds indicator of accurate clock shows a full minute.

4.40.2 Vehicles 1998 ►

Carry out adjustment as follows:

Setting hours:

– Turn setting knob -1- (on lower right next to rev counter) anti-clockwise.

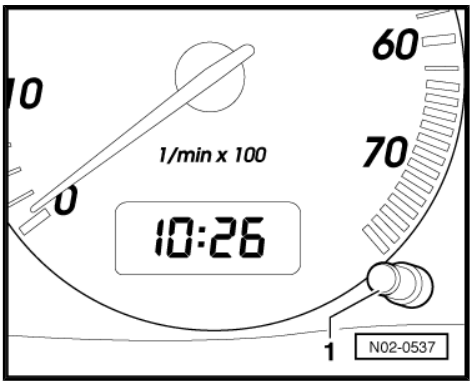

By turning the setting knob shortly, the clock will be altered by one hour. By turning and holding the knob the alteration will be continuous.

Setting minutes:

– Turn setting knob -1- clockwise.

By turning the setting knob shortly, the clock will be altered by one minute. By turning and holding the setting knob the alteration will be continuous.

With the setting knob -1- the clock can be set exactly to the second as follows:

– Turn setting knob to right until the time is one minute before time to be set.

– Turn button to the right at the moment when the seconds indicator of accurate clock shows a full minute.

4.40.3 Vehicles 2000 ►

Set clock Polo GTI 2000 ► ⇒ page 104 .

Carry out adjustment as follows:

Setting hours:

satelettronica

– Press briefly, preferably with a ball pen on button -1-, to advance the time one hour. Pressing the button continuously speeds up selection of hours.

Setting minutes:

– Press briefly, preferably with a ball pen on button -2-, to advance the time one minute. Pressing the button continuously speeds up selection of minutes.

With the minute button the clock can be set exactly to the second:

– Press button until time is one minute before time to be set. Turn button at the moment when the seconds indicator of accurate clock shows a full minute.

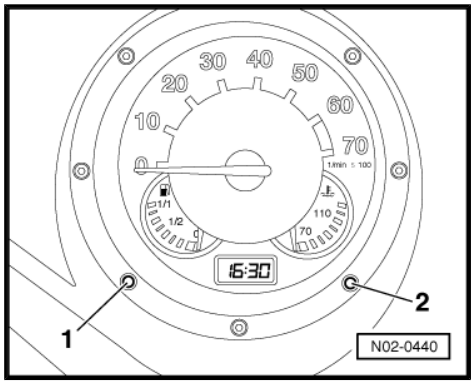

4.40.4 Set clock Polo GTI vehicles 2000 ►

Carry out adjustment as follows:

– Press the button briefly -2-, to advance the time one minute. Pressing the button continuously speeds up selection of minutes and hours clockwise.

– Press the button briefly -1-, to reset the time one minute. Pressing the button continuously speeds up selection of minutes and hours anti-clockwise.

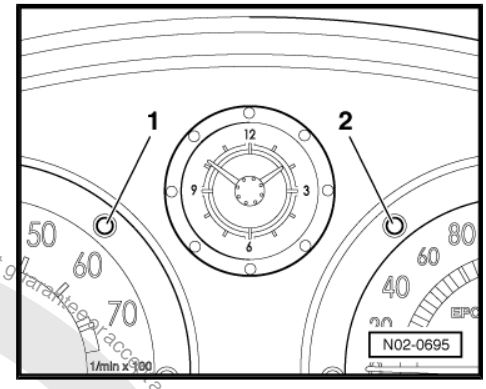

4.41 Underbody protection: visual check for damage

During visual check the floor pan, wheel housings, side members and especially all cover caps fitted -arrows- must be checked for damage!

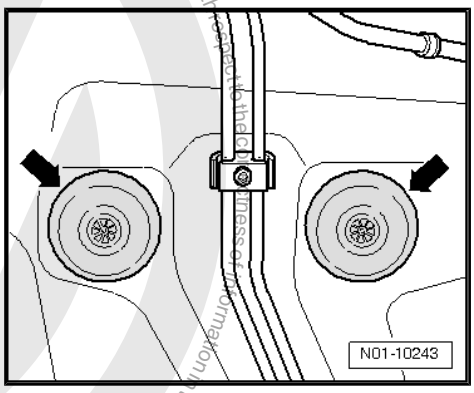

Note

- *Faults found must always be rectified (repair measure). This inhibits corrosion and rusting through.*
- *⇒ ElsaWin; Technical information; "Paint manual"; 4. Corrosion protection .*

4.42 Toothed belt: checking for wear

Special tools and workshop equipment required

Protected by copyright. Copying or reproduction in whole or in part or in any other form or medium is not permitted unless authorised by Volkswagen AG. Volkswagen AG does not guarantee or accept any liability with respect to the correctness of information in this document. Copyright by Volkswagen AG.
satelettronica

- Workshop vernier caliper - VAS 5276-

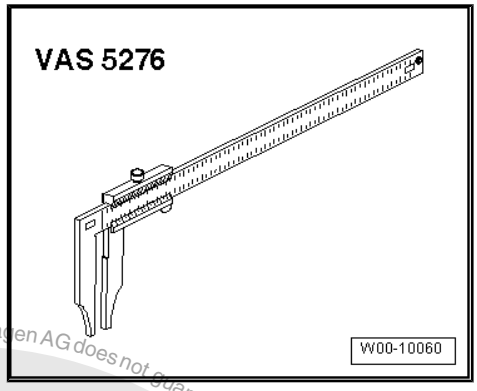

4.42.1 SDI engines

Carry out following procedure:

– Open clips -1- on upper toothed belt guard.
– Unhook toothed belt guard -2- and pull to side.

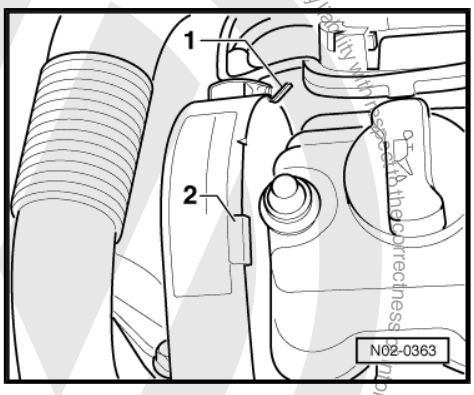

– Measure the width of toothed belt with a workshop vernier caliper - VAS 5276- .

Engine code	Wear limit
AHG, AKU	21 mm
AGD	22 mm

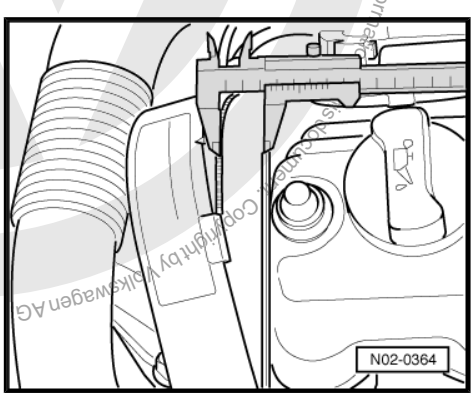

Note

- *When a toothed belt has reached a width of 21 mm or 22 mm respectively, the wear limit has been reached and it must be renewed (repair measure). Inform customer!*
- *The engine must never under any circumstances be turned over using the camshaft when checking and making adjustments. Not observing this can lead to severe engine damage.*

4.42.2 TDI engines

Carry out following procedure:

Protected by copyright. Copying for private or commercial purposes, in part or in whole, is not permitted unless authorised by Volkswagen AG. Volkswagen AG does not guarantee or accept any liability with respect to the correctness of information. Copyright by Volkswagen AG
satelettronica

– Pull out oil dipstick -1- and remove oil filler cap -2-.
– Unclip engine cover and remove upwards.

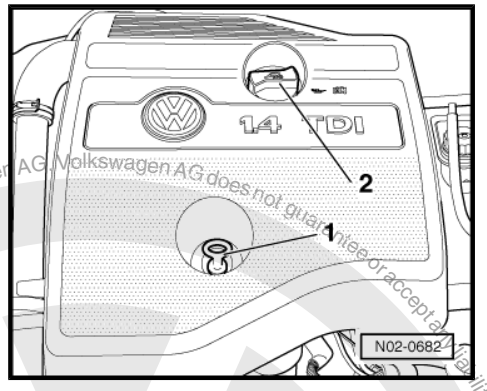

– Open clips -1- on upper toothed belt guard.
– Unhook toothed belt guard -2- and pull to side.

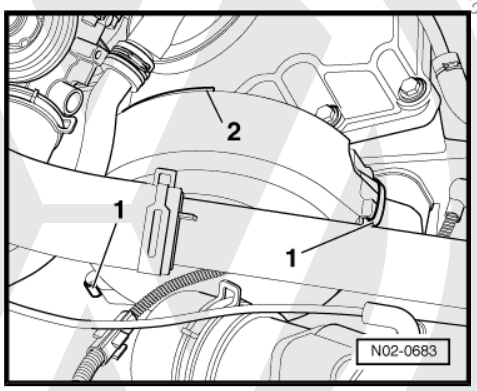

– Measure the width of toothed belt with a workshop vernier caliper - VAS 5276- .

Wear limit: 27 mm

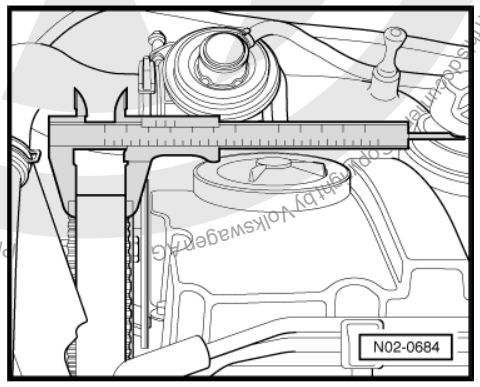

Note

- *When a toothed belt has reached a width of 27 mm, the wear limit has been reached and it must be renewed (repair measure). Inform customer!*
- *The engine must never under any circumstances be turned over using the camshaft when checking and making adjustments. Not observing this can lead to severe engine damage.*

4.43 Camshaft drive toothed belt and tensioning roller: renewing, PD diesel engine

– Carry out procedure:»Power unit« ⇒ Engine cylinder head, valve gear; Rep. gr. 15 ; Removing, installing and tensioning toothed belt »Removing, installing and tensioning toothed belt«

4.44 Toothed belt: renewing

Diesel engine codes AGD, AHG, AKU, ASX

– Carry out procedure:»Engine mechanics« ⇒ Engine cylinder head, valve gear; Rep. gr. 15 ; Removing, installing and tensioning toothed belt »Removing, installing and tensioning toothed belt«

satelettronica

4.45 Toothed belt: checking condition and tensioning, tensioning toothed belt if necessary

Diesel engine code AEF

4.45.1 Toothed belt: checking condition

– Remove air filter/intake manifold connecting hose.
– Open clips for upper toothed belt guard and remove cover.
– Check condition of toothed belt for:
♦ Cracks, cross sectional breaks
♦ Layer separation (toothed belt body, tensile cords)
♦ Toothed belt body breakup
♦ Frayed cord strands
♦ Surface cracks (synthetic coating)
♦ Traces of oil and grease

Note

If faults are found, always renew toothed belt. This can avoid breakdowns and malfunctions. The replacement of a toothed belt is a repair measure.

When checking condition, especially watch for following damage:

A - Cracks (coating)

B - Side contact

C - Fraying

D - Cracks (in teeth base)

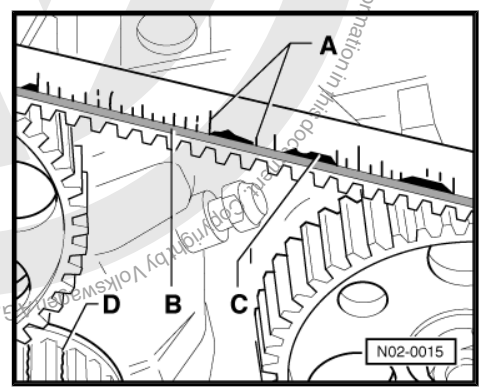

Note

To check the toothed belt tension, the upper toothed belt cover must remain removed.

4.45.2 Toothed belt tension: checking

Before checking the toothed belt tension, the semi-automatic tensioning device must be checked for correct function as follows:

Protected by copyright. Copying for private or commercial purposes, in part or in whole is not permitted unless authorised by Volkswagen AG. Volkswagen AG does not guarantee or accept any liability with respect to the correctness of information in this document. Copyright by Volkswagen AG.
satelettronica

– Press toothed belt with force using thumb. Notch and raised mark -arrows- should move.

– Check tensioning roller for damage and wear.

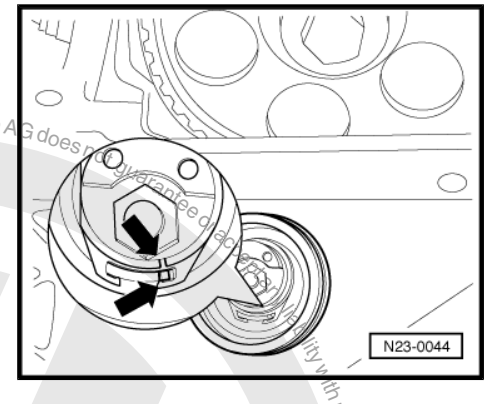

Note

If damage is determined on tensioning roller, the toothed belt tensioning roller must always be renewed (repair measure).

– Relieve toothed belt. The tensioning roller must return to its initial position. (Notch and raised mark must align).

If the notch and raised mark -arrows- align, the check is finished.

If the notch and raised mark do not align, the toothed belt must be tensioned.

4.45.3 Toothed belt: tensioning

– »Engine mechanics«⇒ Engine cylinder head, valve gear; Rep. gr. 15 ; Removing, installing and tensioning toothed belt »Removing, installing and tensioning toothed belt«

4.46 Spark plugs: renewing

- Spark plugs: renewing, Mono Motronic engines ⇒ page 109
- Spark plugs: renewing, 2-valve engines ⇒ page 109
- Spark plugs: renewing, 2-valve roller rocker finger engines ⇒ page 110
- Spark plugs: renewing, 4-valve roller rocker finger engines ⇒ page 111

Special tools and workshop equipment required

- Torque wrench - V.A.G 1331/- (5 - 50 Nm)

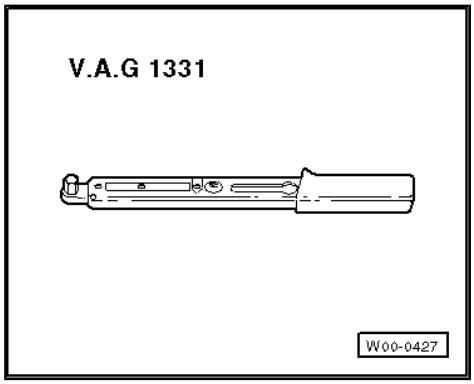

- Spark plug socket - 3122 B-

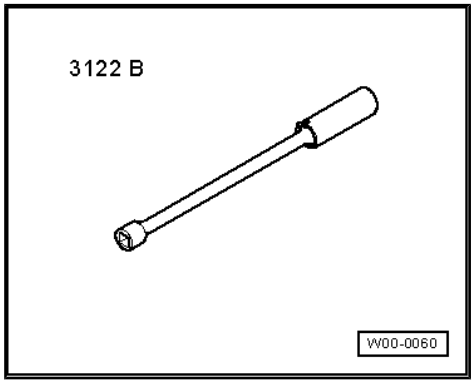

Protected by copyright. Copying for private or commercial purposes, in part or in whole, is not permitted unless authorised by Volkswagen AG. Volkswagen AG does not guarantee or accept any liability with respect to the correctness of information in this document. Copyright by Volkswagen AG.
satelettronica

- Spark plug connector pliers - V.A.G 1922-

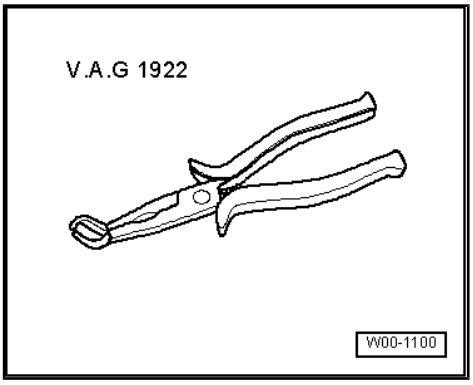

4.46.1 Spark plugs: renewing, Mono Motronic engines

– Remove air filter complete ⇒ Mono Motronic injection and ignition system; Rep. gr. 24 ; Dismantling and assembling air filter .

– Pull off spark plug connector and unscrew spark plugs with spark plug socket and extension - 3122 B- .

– Screw in new spark plugs using spark plug socket and extension - 3122 B- .

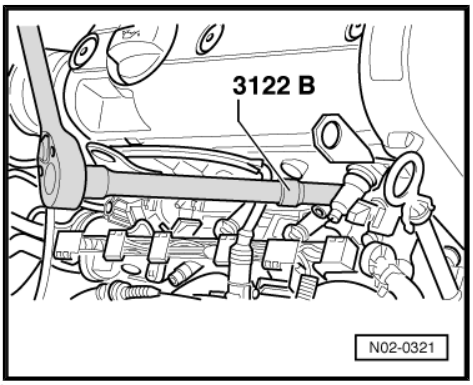

Note

- *Spark plug designation and torque setting ⇒ Mono Motronic injection and ignition system; Rep. gr. 28 ; Repairing ignition system, adjustment data, spark plugs , Removing and installing parts of ignition system; test data, spark plugs.*
- *Please observe disposal instructions!*

– Install air filter.

4.46.2 Spark plugs: renewing, 2-valve engines

– Pull intake air preheating hose -arrow- off exhaust manifold.

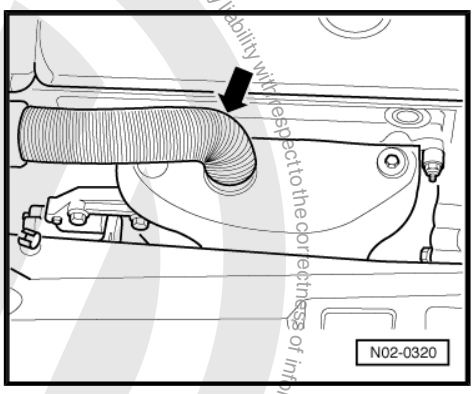

Note

- *The air filter securing bolts must be loosened or tightened only by hand. When loosening or tightening the securing bolts it is only permitted to use a power screwdriver if:*
- *Speed of power screwdriver max. 200 rpm*
- *Specified torque: max. 3 Nm*

Protected by copyright. Copying for private or commercial purposes, in part or in whole, is not permitted unless authorised by Volkswagen AG. Volkswagen AG does not guarantee or accept any liability with respect to the correctness of information in this document. Copyright by Volkswagen AG.
satelettronica

– Unscrew bolts -arrows- and remove air filter completely.

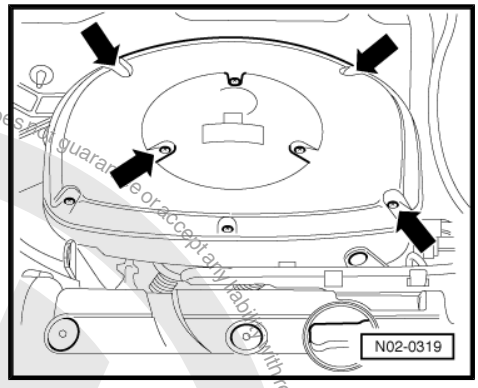

– Pull off spark plug connector and unscrew spark plugs with spark plug socket and extension - 3122 B- .

– Screw in new spark plugs using spark plug socket and extension - 3122 B- .

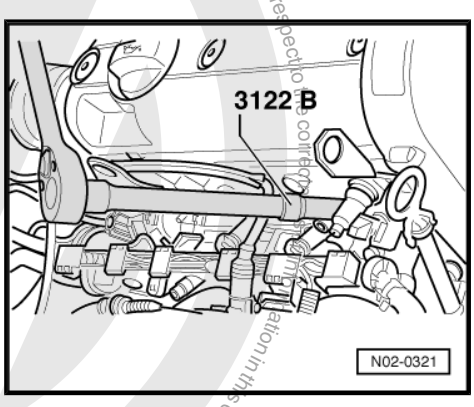

Note

- *Spark plug designation and torque setting ⇒ Motronic injection and ignition system; Rep. gr. 28 ; Repairing ignition system, adjustment data, spark plugs Repairing ignition system; adjustment data, spark plugs.*
- *Please observe disposal instructions!*

– Insert filter housing and tighten cross head bolts -arrows-.

– Connect hose for intake air preheating -arrow- on exhaust manifold.

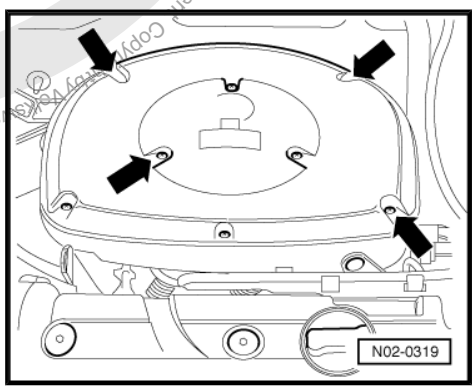

4.46.3 Spark plugs: renewing, 2-valve roller rocker finger engines

– Remove air filter housing ⇒ page 52 .

Protected by copyright. Copying for private or commercial purposes, in part or in whole, is not permitted unless authorised by Volkswagen AG. Volkswagen AG does not guarantee or accept any liability with respect to correctness and completeness of the information in this document.
Copyright by Volkswagen AG.
satelettronica

– Pull off spark plug connector and unscrew spark plugs with spark plug socket and extension - 3122 B- .

– Screw in new spark plugs using spark plug socket and extension - 3122 B- .

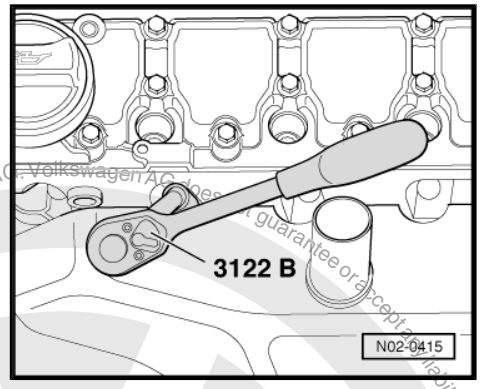

Note

♦ *Spark plug designation and torque setting ⇒ Injection and ignition system; Rep. gr. 28 ; Repairing ignition system, adjustment data, spark plugs Repairing ignition system; adjustment data, spark plugs.*

♦ *Please observe disposal instructions!*

– Fit spark plug connectors.

– Install air filter housing ⇒ page 52 .

4.46.4 Spark plugs: renewing, 4-valve roller rocker finger engines

– Take off oil sealing cap -1-.

– Take ignition cables -2- out of cover -3- and pull cover upwards slightly.

– Pull off spark plug connectors and place ignition cables with cover to side.

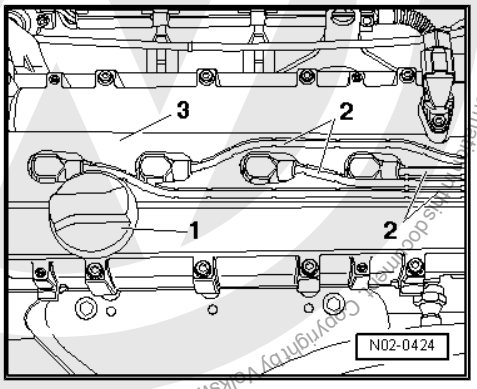

– Unscrew spark plugs using spark plug socket - VAS 3122B- .

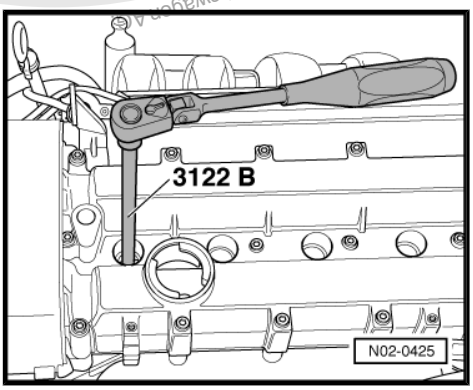

Note

♦ *Spark plug designation and torque setting ⇒ Injection and ignition system; Rep. gr. 28 ; Repairing ignition system, adjustment data, spark plugs Repairing ignition system; adjustment data, spark plugs.*

♦ *Please observe disposal instructions!*

– Screw in new spark plugs using spark plug socket and extension - VAS 3122B- .

– Install spark plug cover.

Protected by copyright. Copying for private or commercial purposes, in part or in whole, is not permitted unless authorised by Volkswagen AG. Volkswagen AG does not guarantee or accept any liability with respect to the correctness of information in this document. Copyright by Volkswagen AG.
satelettronica

– Fit oil sealing cap -1-.
– Fit spark plug connectors.
– Press ignition cables -2- into channels in spark plug cover.

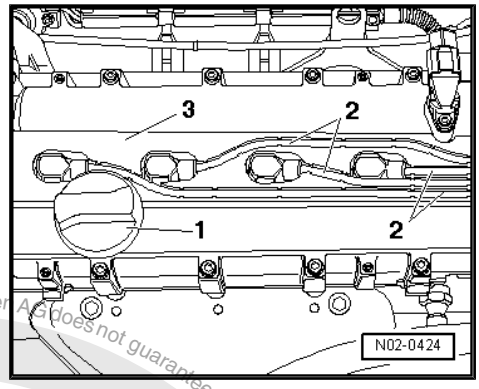

4.47 Camshaft drive toothed belt: checking (4-cylinder petrol engine)

Toothed belt: checking condition

– Removing and installing toothed belt guard upper part ⇒ 4-cylinder injection engine, mechanics; Rep. gr. 13 ; Dismantling and assembling engine »Dismantling and assembling engine«
– Check condition of toothed belt for:
♦ Cracks, cross sectional breaks
♦ Layer separation (toothed belt body, tensile cords)
♦ Toothed belt body breakup
♦ Frayed cord strands
♦ Surface cracks (synthetic coating)
♦ Traces of oil and grease

Note

If faults are found, always renew toothed belt. This can avoid breakdowns and malfunctions. The replacement of a toothed belt is a repair measure.

When checking condition, especially watch for following damage:

A - Cracks (coating)

B - Side contact

C - Fraying

D - Cracks (in teeth base)

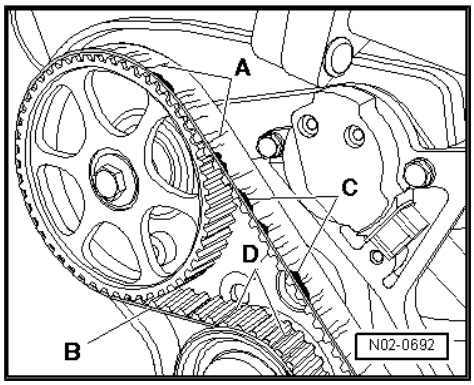

Protected by copyright. Copying for private or commercial purposes, partially or in whole is not permitted unless authorised by Volkswagen AG. Volkswagen AG does not guarantee or accept any liability with respect to the correctness of information in this document. Copyright by Volkswagen AG.
satelettronica

4.48 Driver and front passenger airbags: visual check of airbag units

Vehicles ▸ 1999

Driver side airbag:

The airbag recognition is the inscription “AIRBAG” on the steering wheel padded plate.

– Carry out visual check of padded plate -1- for exterior damage.

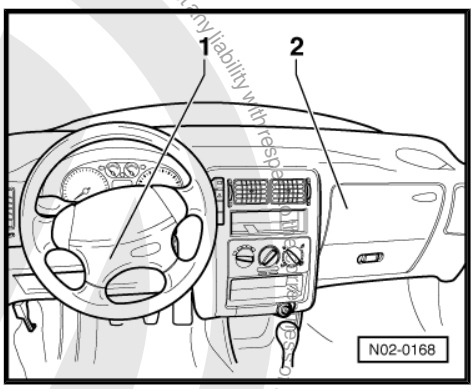

> ⚠ WARNING
>
> - *The steering wheel padded plate surface must not have stickers attached or be covered or otherwise be modified. This ensures that the future function of the airbag is guaranteed. Ensure the customer is aware of these instructions.*
> - *The steering wheel padded plate must only be cleaned with a dry cloth or a cloth moistened with water.*

Front passenger airbag:

The airbag recognition is the inscription “AIRBAG” on the right-hand side of dash panel (front passenger side).

– Carry out visual check of the dash panel surface -2- for exterior damage.

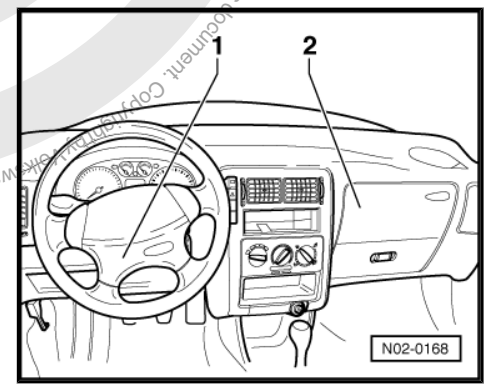

> ⚠ WARNING
>
> - *The surface of the front passenger airbag module must not have stickers attached or be covered or be otherwise modified. This ensures that the future function of the airbag is guaranteed. Ensure the customer is aware of these instructions.*
> - *The surface of the airbag module must only be cleaned with a dry cloth or a cloth moistened with water.*

Vehicles 2000 ▸

Driver side airbag:

The airbag recognition is the inscription “AIRBAG” on the steering wheel padded plate.

– Carry out visual check of padded plate -1- for exterior damage.

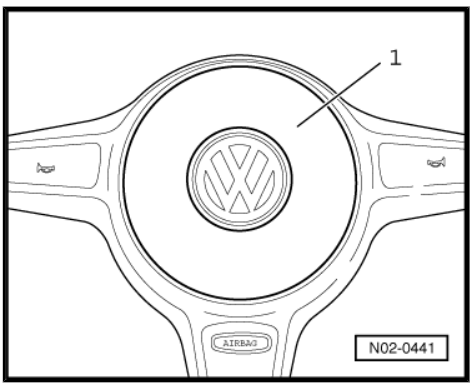

> ⚠ WARNING
>
> - *The steering wheel padded plate surface must not have stickers attached or be covered or otherwise be modified. This ensures that the future function of the airbag is guaranteed. Ensure the customer is aware of these instructions.*
> - *The steering wheel padded plate must only be cleaned with a dry cloth or a cloth moistened with water.*

Front passenger airbag:

Protected by copyright. Copying for private or commercial purposes, in part or in whole, is not permitted unless authorised by Volkswagen AG. Volkswagen AG does not guarantee or accept any liability with respect to the correctness of information in this document. Copyright by Volkswagen AG.
satelettronica

The airbag recognition is the inscription “AIRBAG” on the right-hand side of dash panel (front passenger side).

– Carry out visual check of dash panel surface -2- for exterior damage.

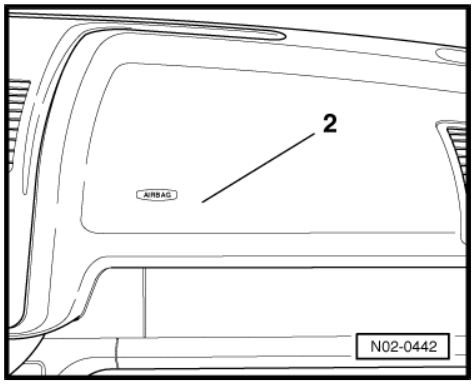

WARNING

- *The surface of the front passenger airbag module must not have stickers attached or be covered or be otherwise modified. This ensures that the future function of the air-bag is guaranteed. Ensure the customer is aware of these instructions.*
- *The surface of the airbag module must only be cleaned with a dry cloth or a cloth moistened with water.*

Protected by copyright. Copying for private or commercial purposes, in part or in whole, is not permitted unless authorised by Volkswagen AG. Volkswagen AG does not guarantee or accept any liability with respect to the correctness of information in this document. Copyright by Volkswagen AG.

satelettronica

5 Exhaust emissions test

Exhaust emissions test for petrol engines without OBD
⇒ page 115

Exhaust emissions test for petrol engines with OBD
⇒ page 134

Exhaust emissions test for diesel engines without OBD
⇒ page 137

Note

- *Please observe the country specific legal regulations.*
- *The exhaust emissions test described below has been created according to the legal regulations valid in Germany.*
- *If the vehicle is equipped with or without OBD, see ⇒ page 1 .*

5.1 Exhaust emissions test for petrol engines without OBD

Vehicles which are fitted with or without onboard diagnosis can be found in the engine list ⇒ page 1 .

Caution

- *Observe "SAFETY AND DAMAGE AVOIDANCE PRECAUTIONS" in the operating instructions for VAS 6300.*

Note

- *All test conditions and data required for exhaust emissions test: ⇒ Data sheets for exhaust emissions test*
- *The ignition timing is determined by the control unit and cannot be displayed. Adjustment is not possible.*
- *Idling speed and CO content are not adjustable (only check). For deviations from test value: carry out repair measures.*
- *The CO content is regulated by the lambda regulation. Faults in the lambda regulation are detected in self-diagnosis and stored in fault memory.*
- *Faults identified (engine electronics) when fault memory is read must be rectified and the fault memory then cleared.*
- *To prevent injuries to personnel and/or damage to ignition and injection system, the ignition system wiring (including high voltage wiring) should be connected and disconnected only with ignition switched off.*
- *The following description refers to vehicles equipped without OBD with regulated catalytic converter.*

Special tools and workshop equipment required

Protected by copyright. Copying for private or commercial purposes, in part or in whole, is not permitted unless authorised by Volkswagen AG. Volkswagen AG does not guarantee or accept any liability with respect to the correctness of information in this document. Copyright by Volkswagen AG.
satelettronica

- Emissions testing station - VAS 6300-

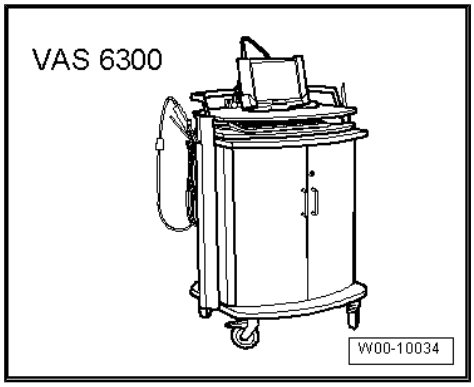

- Diagnostic cable - VAS 5051/6A-
- Adapter for older vehicles - VAS 5051/2-

or

- Engine speed adapter - VAS 5087 A-

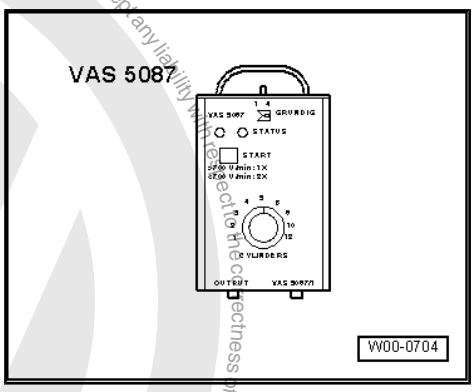

Note

- *It is only possible to carry out an exhaust emissions test when all units of the emissions testing station - VAS 6300- are connected properly and combined with each other according to the operating instructions.*
- *All work to be performed is displayed by the emissions testing station - VAS 6300- .*

Prerequisites for testing:

- All test conditions and data required for exhaust emissions test: ⇒ Data sheets for exhaust emissions test for respective engine.
- For bar code reading the EET data sheet must be printed out.
- Apply handbrake.
- Automatic gearbox: Move selector lever to position “P” or “N”.
- Manual gearbox: gear lever in neutral.
- Install engine speed adjuster - V.A.G 1788/10- .

– Perform exhaust emissions test according to instructions on display.

Initial screen:

– Select button -arrow- “exhaust emissions test”.

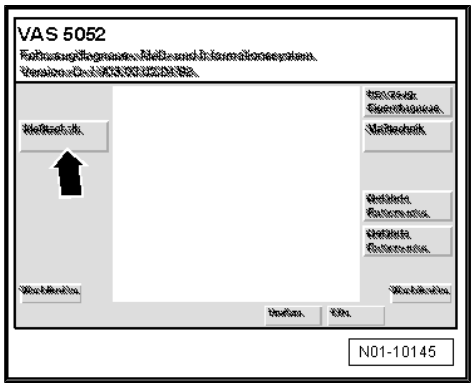

Protected by copyright. Copying for private or commercial purposes, in part or in whole, is not permitted unless authorised by Volkswagen AG. Volkswagen AG does not guarantee or accept any liability with respect to the correctness of information in this document. Copyright by Volkswagen AG.

satelettronica

An overview is displayed to select the respective EET type.

– Select “EET petrol” -arrow-.

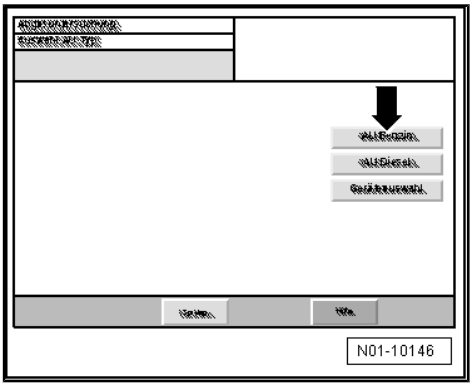

The display for warm-up phase appears.

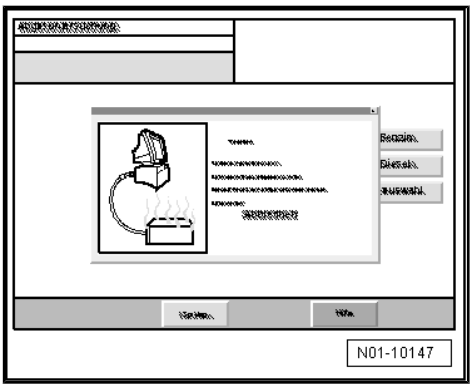

Continue exhaust emissions test according to instructions on display.

– If the EET specification selection is displayed, select respective “EET specification selection” -arrow-.

♦ When exhaust emissions test is performed for the first time, either select “Standard values”,

♦ Or “Last vehicle” when an exhaust emissions test is to be carried out again.

– Select “Continue” on display, see -item 1-.

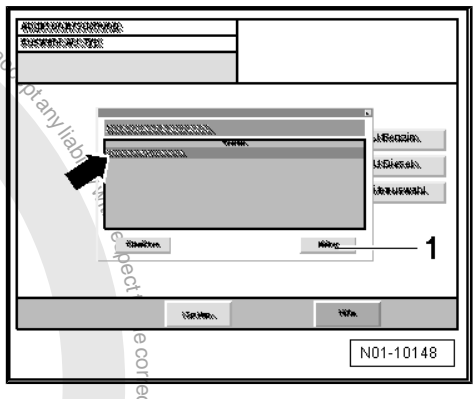

Vehicle data input:

The vehicle data input menu is displayed.

Note

♦ *For new models the document previously known as the vehicle registration document is now called the vehicle registration certificate part 1.*

♦ *For new models the document previously known as the vehicle log book is now called the vehicle registration certificate part 2.*

Protected by copyright. Copyright by Volkswagen AG.
Copyright by Volkswagen AG. Volkswagen AG does not guarantee or accept any liability with respect to the correctness of information in this document.
Copying for private or commercial purposes, in part or in whole, is not permitted unless authorised by Volkswagen AG.
satelettronica

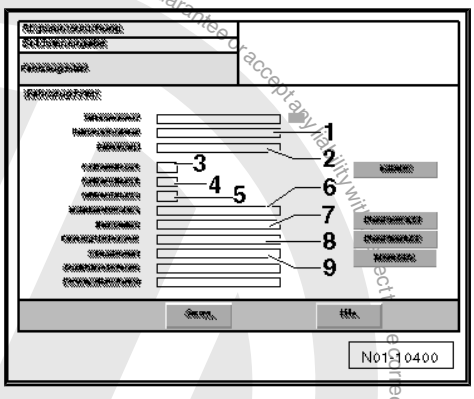

- -1- Vehicle manufacturer: “e.g. VOLKSWAGEN - VW”
- -2- Vehicle type: “e.g. Golf”
- -3- Key number to 1: “e.g. 11”
- -4- Key number to 2: “e.g. 0603” (vehicle registration document)
- -4- Key number to 2.1 (code to 2): “e.g. 0603” (vehicle registration certificate part 1)
- -5- Key number to 3: “e.g. 358” (vehicle registration document)
- -5- Key number for 2.2 (code to D2): “e.g. 358” (vehicle registration certificate part 1)
- -6- Engine code “e.g. AQY”
- -7- Registration number: “e.g. WOB-HH 1234”
- -8- Vehicle identification number: “e.g. WVWZZZ1JZYW123456”

– Enter odometer reading at -item 9- “e.g. 32000”.

Note

- *Further functions can be called up using GoTo button.*
- *The test can be terminated using GoTo button.*

– Select “without OBD”, -arrow-.

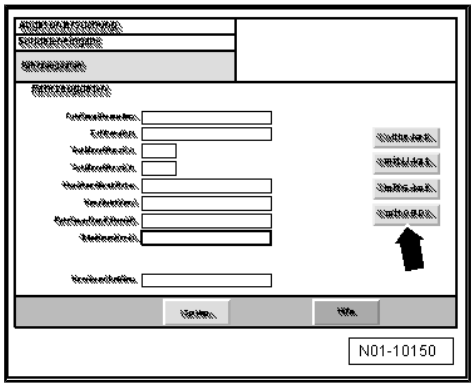

Specified data input for EET:

There are different ways to enter the specified data:

- 1. By manual input
- 2. By bar code input from EET data sheet
- 3. Through ELSA web service

Note

- *To use the ELSA web service, the diagnostic tester which is used for the exhaust emissions test, must be integrated in the workshop network.*
- *For the ELSA web service the vehicle specified data are automatically transmitted via the network to the respective mask.*

Manual specified data input for EET:

Note

All test conditions and data required for exhaust emissions test
⇒ Data sheets for exhaust emissions test for respective engine.

– Perform manual data input according to instructions on display.

Protected by copyright. Copying for private or commercial purposes, in part or in whole, is not permitted unless authorised by Volkswagen AG. Volkswagen AG does not guarantee or accept any liability with respect to the correctness of information in this document. Copyright by Volkswagen AG.
satelettronica

– Enter displayed values on EET data sheet in column “Test values for exhaust emissions test” on display as follows:

1 - Test speed (idling speed)

2 - Warm-up phase for catalytic converter

3 - Engine temperature

4 - Increased idling speed

5 - CO content at increased idling speed

6 - Lambda at increased idling speed

7 - Idling speed

8 - Select regulating probe type, either “step-type probe”, or “broad-band probe” -item 1-.

9 - Lambda probe value

– When all data have been entered properly, press button ⇨ -arrow-.

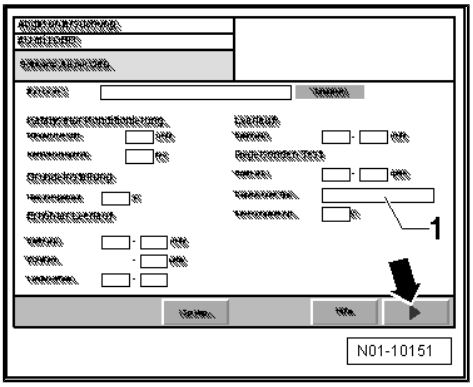

Specified data input for EET as bar code:

– If specified data for EET are available as bar code, read bar code of EET data sheet with bar code reader.

All data required are shown on display.

– Press ⇨ button -arrow- to proceed.

Visual inspection:

Follow instructions on display:

– Perform visual check.

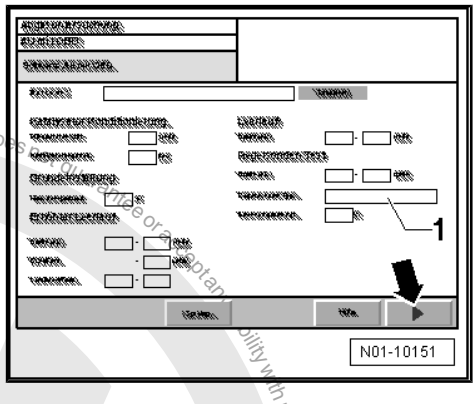

Protected by copyright. Copying for private or commercial purposes, in part or in whole, is not permitted unless authorised by Volkswagen AG. Volkswagen AG does not guarantee or assume any liability with respect to the correctness of information in this document. Copyright by Volkswagen AG.
satelettronica

– If visual check is OK press “OK” button -arrow-.

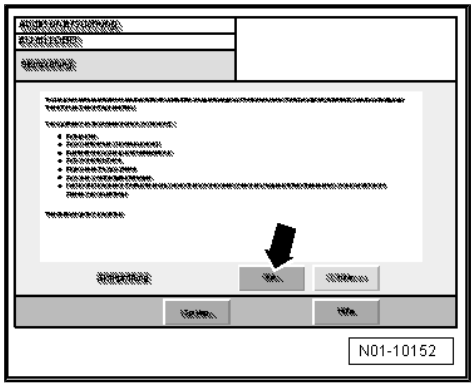

Note

When "not OK" button is pressed a check will be carried out

The visual check is displayed with the request to connect the cables to the vehicle.

Follow instructions on display:

– Switch off ignition.

– Connect adapter for older vehicles - VAS 5051/2- or engine speed adapter - VAS 5087/- or diagnostic cable - VAS 5051/6A- to the vehicle.

Note

- *On some engines the inductive sender for cylinder 1 cannot be connected.*
- *The engine speed adapter - VAS 5087/- can be used for these engines.*
- *On some vehicles the engine speed adapter - VAS 5087/- must be used.*

– Connect diagnostic cable connector to diagnostic connection ⇒ page 20 .

– Switch ignition on.

– Start engine.

– Insert emission probe in exhaust tail pipe.

Note

The exhaust emissions test is only continued when the test probe is in the exhaust tail pipe.

It is automatically switched to test for readiness of operation.

Catalytic converter conditioning:

It is automatically switched to warm-up phase of catalytic converter.

– Follow instructions on display.

Measurement starts when the engine speed has reached the required level.

– Maintain engine speed in required engine speed range.

The remaining time to perform the warm-up phase is displayed -arrow A-.

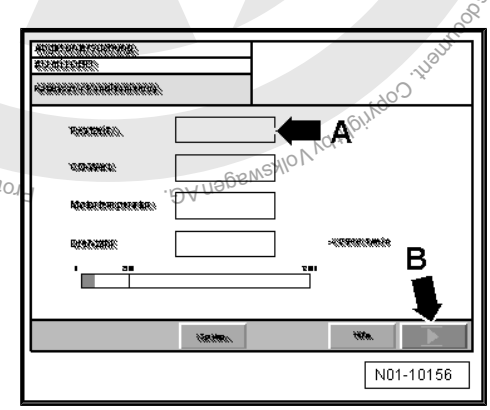

Protected by copyright. Copying for private or commercial purposes, in part or in whole, is not permitted unless authorised by Volkswagen AG. Volkswagen AG does not guarantee or accept any liability with respect to the correctness of information in this document. Copyright by Volkswagen AG.
satelettronica

Warm-up phase:

It is automatically switched to display for measuring engine temperature.

– Follow instructions on display.

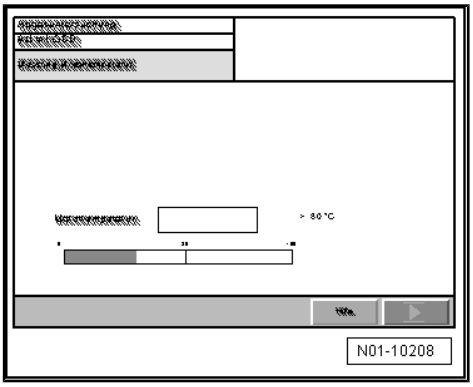

Note

This is only indicated on display if engine temperature has not reached 80°C.

– Bring engine to required temperature.

Measurement at increased idling speed:

It is automatically switched to display for measuring increased idling speed.

– Follow instructions on display.

Measurement starts when the engine speed has reached the required level.

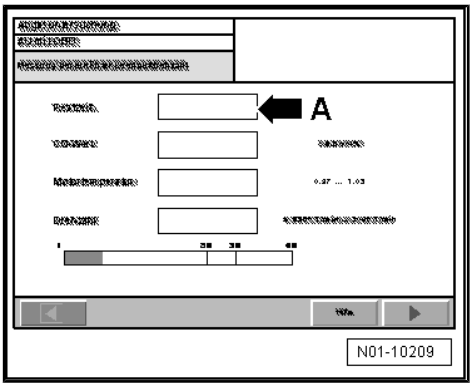

Note

- *Measurement can be skipped using [→] button, i.e. the exhaust emissions test has failed.*
- *Measured values are reset using [←] button, and the test can be repeated.*

– Maintain engine speed in required engine speed range.

The remaining time to perform measurement is displayed -arrow A-.

Measuring idling speed and CO content:

The system switches automatically to the display for measuring the idling speed and CO content.

Measurement starts when the engine speed has reached the required level.

The remaining time to perform measurement is displayed -arrow A-.

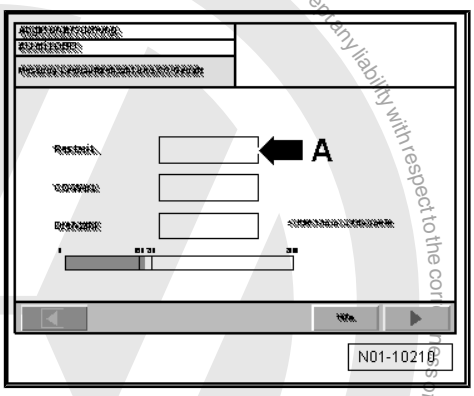

Regulating probe test:

It is automatically switched to display for regulating probe test.

Note

If "Control circuit test - alternative proc." is indicated on display, the disturbance variable relevant for the engine code must be activated *⇒ page 122* *.*

Measurement starts when the engine speed has reached the required level.

– Maintain engine speed in required engine speed range.

The remaining time to perform measurement is displayed -arrow A-.

Protected by copyright. Copying for private or commercial purposes, in part or whole, is not permitted unless authorised by Volkswagen AG. Volkswagen AG does not guarantee or accept any liability with respect to the correctness of information in this document. Copyright by Volkswagen AG.
satelettronica

Evaluation:

When the exhaust emissions test has been performed, the log is shown on display.

The test result is displayed.

Now remarks concerning the exhaust emissions test can be entered -arrow A-. They will then be included in the test log.

– When the exhaust emissions test is classed as passed, select -arrow B- “EET sticker issued” in drop-down menu and date.

– Then confirm with “Yes” -arrow C-.

The exhaust emissions test log is shown on display and can be printed out as often as required in the menu “Print preview” using “Print” button -arrow A-.

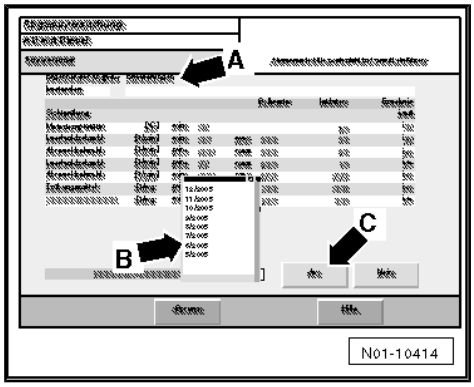

– Press button “Close” -arrow B- to close the menu “Print preview ”.

– Follow instructions on display.

– Take emission probe out of exhaust tail pipe.

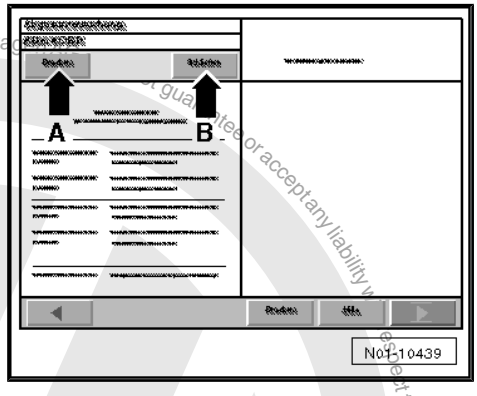

– Then press button -arrow B-

The exhaust emissions test is completed, a new exhaust emissions test can be performed.

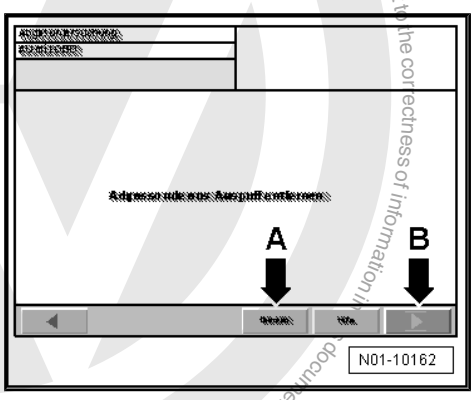

5.1.1 Exhaust emissions test for petrol engines, methods to activate disturbance variable for control circuit test

Activate disturbance variable.

Engine code	Disturbance variable
AQQ	⇒ page 123
ADX, AEA, AEV	⇒ page 123
AEE, AER, AEX, AKK, AKV, ALL, ANX, APQ, AUD	⇒ page 124
AFK	⇒ page 125
AFH	⇒ page 126
AHW	⇒ page 127
AJV	⇒ page 128
ALD	⇒ page 129
APE	⇒ page 130

Protected by copyright. Copying for private or commercial purposes, in part or in whole, is not permitted unless authorised by Volkswagen AG. Volkswagen AG does not guarantee or accept any liability with respect to the correctness of information in this document. Copyright by Volkswagen AG.
satelettronica

ARC	⇒ page 131
AUA, AUB	⇒ page 132
AUC	⇒ page 133

Protected by copyright. Copying for private or commercial purposes, in part or in whole, is not permitted unless authorised by Volkswagen AG. Volkswagen AG does not guarantee or accept any liability with respect to the correctness of information in this document. Copyright by Volkswagen AG.

5.1.2 Engine code: AQQ

Carry out “Control circuit test basic procedure” as follows:

– Activate disturbance variable within 60 seconds as follows:

– Pull 4-pin connector off coolant temperature sender - G62- with coolant temperature sender - G2- -arrow-.

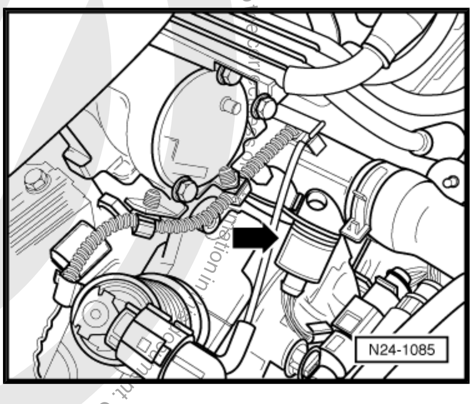

The control unit must recognise the disturbance variable and eliminate through regulation within 60 seconds.

Note

The throttle valve must not be operated during the test, otherwise the disconnected connector will be recognised as fault by the self-diagnosis and stored in the fault memory.

– Fit connector on coolant temperature sender - G62- with coolant temperature sender - G2- .

Note

When connecting the connector always ensure that it is fitted properly and engages noticeably.

If actual figures deviate from specifications: Repair measures and again perform exhaust emissions test!

After completing exhaust emissions test note the following:

♦ Reconnect all hoses and connections that have been disconnected or separated for checking and adjusting purposes.

♦ Operate assemblies e.g. power-assisted steering, automatic gearbox, air conditioning system and check that the engine operates smoothly under these load conditions.

5.1.3 Engine codes: ADX, AEA, AEV,

Carry out “Control circuit test basic procedure” as follows:

Activate disturbance variable within 60 seconds as follows:

sateletronica

– Pull vacuum hose off injection part towards intake air preheating temperature selector -arrow-.

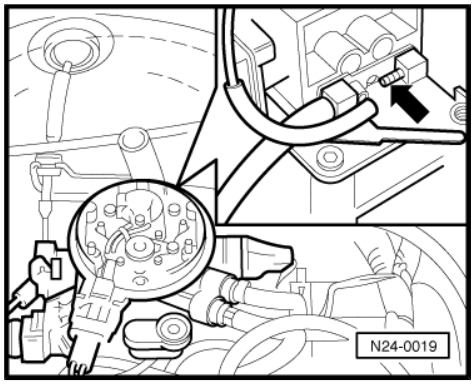

The control unit must recognise the disturbance variable and eliminate through regulation within 60 seconds.

If this message appears on the display:

– Reconnect vacuum hose.

The control unit must recognise deactivation of the disturbance variable and eliminate through regulation within 60 seconds.

Note

- *The control circuit test is also completed when the disturbance variable has been recognised in one direction and has been eliminated through regulation.*
- *If disturbance variable has not been recognised, repeat Lambda control circuit test.*

If actual figures deviate from specifications: Repair measures and again perform exhaust emissions test!

After completing exhaust emissions test note the following:

- Reconnect all hoses and connections that have been disconnected or separated for checking and adjusting purposes.
- Operate assemblies e.g. power-assisted steering, automatic gearbox, air conditioning system and check that the engine operates smoothly under these load conditions.

5.1.4 Engine codes: AEE, AER, AEX, AKK, AKV, ALL, ANX, APQ, AUD

Carry out “Control circuit test basic procedure” as follows:

Activate disturbance variable within 60 seconds as follows:

Protected by copyright. Copying for private or commercial purposes, in part or in whole, is not permitted unless authorised by Volkswagen AG. Volkswagen AG does not guarantee or accept any liability with respect to the correctness of information in this document. Copyright by Volkswagen AG.
satelettronica

– Pull 4-pin connector -1- off coolant temperature sender 00522-2312) - G62- -2-.

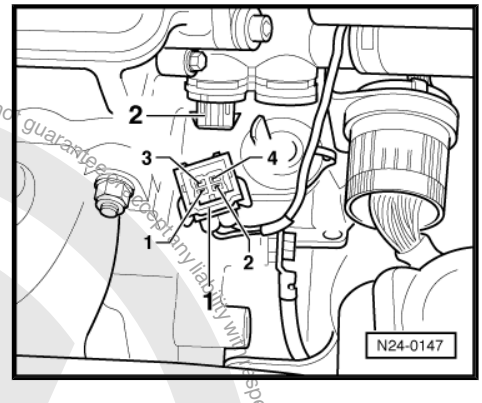

The control unit must recognise the disturbance variable and eliminate through regulation within 60 seconds.

Note

The throttle valve must not be operated during the test, otherwise the disconnected connector will be recognised as fault by the self-diagnosis and stored in the fault memory.

– Reconnect 4-pin connector.

Note

When connecting the connector always ensure that it is fitted properly and engages noticeably.

The control unit must recognise deactivation of the disturbance variable and eliminate through regulation within 60 seconds.

Note

- *The control circuit test is also passed when the disturbance variable has been recognised in one direction and has been eliminated through regulation.*
- *If the disturbance variable has not been recognised (lambda change insufficient) repeat lambda control circuit test.*

If actual figures deviate from specifications: Repair measures and again perform exhaust emissions test!

After completing exhaust emissions test note the following:

- Reconnect all hoses and connections that have been disconnected or separated for checking and adjusting purposes.
- Operate assemblies e.g. power-assisted steering, automatic gearbox, air conditioning system and check that the engine operates smoothly under these load conditions.

5.1.5 Engine code: AFK

Carry out “Control circuit test basic procedure” as follows:

Activate disturbance variable within 60 seconds as follows:

Protected by copyright. Copyright by Volkswagen AG. Volkswagen AG does not guarantee or accept any liability with respect to the correctness of information in this document. Copyright by Volkswagen AG. Volkswagen AG, Volkswagen AG does not guarantee or accept any liability with respect to the correctness of information in this document. Copyright by Volkswagen AG. Volkswagen AG, Volkswagen AG does not guarantee or accept any liability with respect to the correctness of information in this document. Copyright by Volkswagen AG. Volkswagen AG, Volkswagen AG does not guarantee or accept any liability with respect to the correctness of information in this document. Copyright by Volkswagen AG. Volkswagen AG, Volkswagen AG does not guarantee or accept any liability with respect to the correctness of information in this document. Copyright by Volkswagen AG.
satelettronica

– Pull 4-pin connector off coolant temperature sender - G62- with coolant temperature sender - G2- -arrow-.

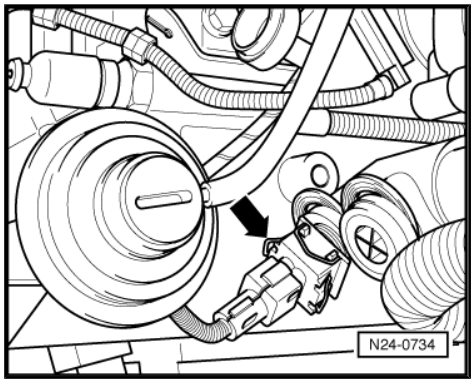

The control unit must recognise the disturbance variable and eliminate through regulation within 60 seconds.

Note

The throttle valve must not be operated during the test, otherwise the disconnected connector will be recognised as fault by the self-diagnosis and stored in the fault memory.

– Fit connector on coolant temperature sender - G62- with coolant temperature sender - G2- .

Note

When connecting the connector always ensure that it is fitted properly and engages noticeably.

The control unit must recognise deactivation of the disturbance variable and eliminate through regulation within 60 seconds.

If actual figures deviate from specifications: Carry out repair measures and again perform exhaust emissions test!

After completing exhaust emissions test note the following:

- Reconnect all hoses and connections that have been disconnected or separated for checking and adjusting purposes.
- Operate assemblies e.g. power-assisted steering, automatic gearbox, air conditioning system and check that the engine operates smoothly under these load conditions.

5.1.6 Engine code: AFH

Carry out “Control circuit test basic procedure” as follows:

– Activate disturbance variable within 60 seconds as follows:

Protected by copyright. Copying for private or commercial purposes, in part or in whole, is not permitted unless authorised by Volkswagen AG. Volkswagen AG does not guarantee or accept any liability with respect to the correctness of information in this document. Copyright by Volkswagen AG.
satelettronica

– Pull 4-pin connector -1- off coolant temperature sender - G62- with coolant temperature sender - G2- -2-.

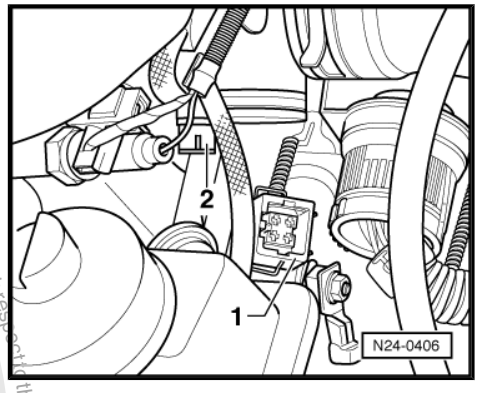

The control unit must recognise the disturbance variable and eliminate through regulation within 60 seconds.

Note

The throttle valve must not be operated during the test, otherwise the disconnected connector will be recognised as fault by the self-diagnosis and stored in the fault memory.

– Reconnect 4-pin connector.

Note

When connecting the connector always ensure that it is fitted properly and engages noticeably.

Note

- *The control circuit test is also passed when the disturbance variable has been recognised in one direction and has been eliminated through regulation.*
- *If the disturbance variable has not been recognised (lambda change insufficient) repeat lambda control circuit test.*

If actual figures deviate from specifications: Repair measures and again perform exhaust emissions test!

After completing exhaust emissions test note the following:

- Reconnect all hoses and connections that have been disconnected or separated for checking and adjusting purposes.
- Operate assemblies e.g. power-assisted steering, automatic gearbox, air conditioning system and check that the engine operates smoothly under these load conditions.

5.1.7 Engine code: AHW

Carry out “Control circuit test basic procedure” as follows:

– Activate disturbance variable within 60 seconds as follows:

Protected by copyright. Copyright by Volkswagen AG. Volkswagen AG does not guarantee or accept any liability with respect to the correctness of information in this document. Copyright by Volkswagen AG. Protected by copyright. Copying for private or commercial purposes, in part or in whole, is not permitted unless authorised by Volkswagen AG.
satelettronica

– Pull 4-pin connector -arrow- off coolant temperature sender - G62- with coolant temperature sender - G2- .

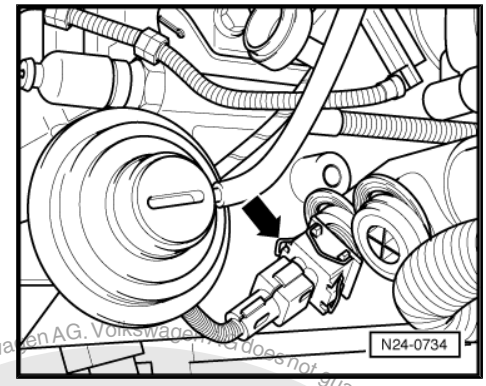

The control unit must recognise the disturbance variable and eliminate through regulation within 60 seconds.

Note

The throttle valve must not be operated during the test, otherwise the disconnected connector will be recognised as fault by the self-diagnosis and stored in the fault memory.

– Fit connector on coolant temperature sender - G62- with coolant temperature sender - G2- .

Note

When connecting the connector always ensure that it is fitted properly and engages noticeably.

The control unit must recognise deactivation of the disturbance variable and eliminate through regulation within 60 seconds.

Note

- *The control circuit test is also passed when the disturbance variable has been recognised in one direction and has been eliminated through regulation.*
- *If the disturbance variable has not been recognised (lambda change insufficient) repeat lambda control circuit test.*

If actual figures deviate from specifications: Repair measures and again perform exhaust emissions test!

After completing exhaust emissions test note the following:

- Reconnect all hoses and connections that have been disconnected or separated for checking and adjusting purposes.
- Operate assemblies e.g. power-assisted steering, automatic gearbox, air conditioning system and check that the engine operates smoothly under these load conditions.

5.1.8 Engine code: AJV

Carry out “Control circuit test basic procedure” as follows:

- Operate assemblies e.g. power-assisted steering, automatic gearbox, air conditioning system and check that the engine operates smoothly under these load conditions.

– Activate disturbance variable within 60 seconds as follows:

Protected by copyright. Copyright by Volkswagen AG. Volkswagen AG does not guarantee or accept any liability with respect to the correctness of information in this document. Copyright by Volkswagen AG. Protected by copyright. Copyright for private or commercial purposes, in part or in whole, is not permitted unless authorised by Volkswagen AG.
satelettronica

– Pull connector -arrow- off coolant temperature sender - G62- with coolant temperature sender - G2- .

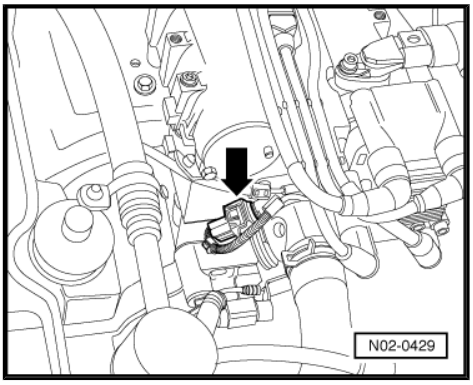

The control unit must recognise the disturbance variable and eliminate through regulation within 60 seconds.

– Reconnect connector of coolant temperature sender - G62- with coolant temperature sender - G2- .

Note

When connecting the connector always ensure that it is fitted properly and engages noticeably.

The control unit must recognise deactivation of the disturbance variable and eliminate through regulation within 60 seconds.

Note

- *The control circuit test is also passed when the disturbance variable has been recognised in one direction and has been eliminated through regulation.*
- *If the disturbance variable has not been recognised (lambda change insufficient) repeat lambda control circuit test.*

If actual figures deviate from specifications: Repair measures and again perform exhaust emissions test!

After completing exhaust emissions test note the following:

- Reconnect all hoses and connections that have been disconnected or separated for checking and adjusting purposes.
- Operate assemblies e.g. power-assisted steering, automatic gearbox, air conditioning system and check that the engine operates smoothly under these load conditions.

5.1.9 Engine code: ALD

Carry out “Control circuit test basic procedure” as follows:

– Activate disturbance variable within 60 seconds as follows:

Protected by copyright. Copying for private or commercial purposes, in part or in whole, is not permitted unless authorised by Volkswagen AG. Volkswagen AG does not guarantee or accept any liability with respect to the correctness of information in this document. Copyright by Volkswagen AG.
satelettronica

– Pull 4-pin connector off coolant temperature sender - G62- with coolant temperature sender - G2- -arrow-.

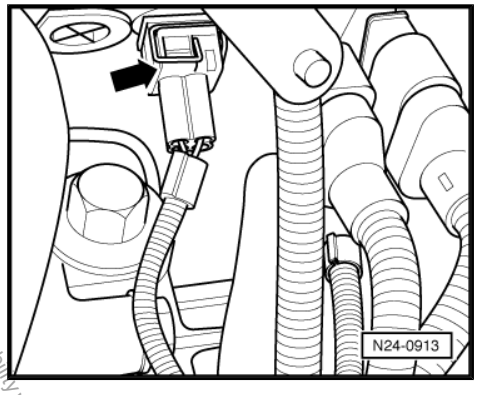

The control unit must recognise the disturbance variable and eliminate through regulation within 60 seconds.

– Fit connector on coolant temperature sender - G62- with coolant temperature sender - G2- .

The control unit must recognise deactivation of the disturbance variable and eliminate through regulation within 60 seconds.

Note

If disturbance variable has not been recognised, repeat Lambda control circuit test.

If actual figures deviate from specifications: Repair measures and again perform exhaust emissions test!

After completing exhaust emissions test note the following:

- Reconnect all hoses and connections that have been disconnected or separated for checking and adjusting purposes.
- Operate assemblies e.g. power-assisted steering, automatic gearbox, air conditioning system and check that the engine operates smoothly under these load conditions.

5.1.10 Engine code: APE

Carry out “Control circuit test basic procedure” as follows:

– Activate disturbance variable within 60 seconds as follows:

Protected by copyright. Copyright by Volkswagen AG.
Copyright by Volkswagen AG, Volkswagen AG does not guarantee or accept any liability with respect to the correctness of information in this document. Copying for private or commercial purposes, in part or in whole, is not permitted unless authorised by Volkswagen AG.
satelettronica

– Pull 4-pin connector off coolant temperature sender - G62- with coolant temperature sender - G2- -arrow-.

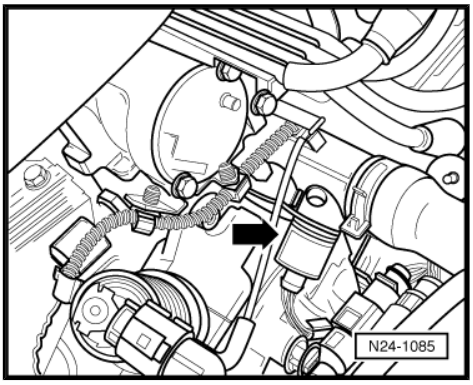

The control unit must recognise the disturbance variable and eliminate through regulation within 60 seconds.

Note

The throttle valve must not be operated during the test, otherwise the disconnected connector will be recognised as fault by the self-diagnosis and stored in the fault memory.

– Fit connector on coolant temperature sender - G62- with coolant temperature sender - G2- .

Note

When connecting the connector always ensure that it is fitted properly and engages noticeably.

The control unit must recognise deactivation of the disturbance variable and eliminate through regulation within 60 seconds.

♦ The control circuit test is also completed when the disturbance variable has been recognised only in one direction.

If actual figures deviate from specifications: Carry out repair measures and again perform exhaust emissions test!

After completing exhaust emissions test note the following:

♦ Reconnect all hoses and connections that have been disconnected or separated for checking and adjusting purposes.

♦ Operate assemblies e.g. power-assisted steering, automatic gearbox, air conditioning system and check that the engine operates smoothly under these load conditions.

5.1.11 Engine code: ARC

Carry out “Control circuit test basic procedure” as follows:

– Activate disturbance variable within 60 seconds as follows:

Protected by copyright. Copying for private or commercial purposes, in part or in whole, is not permitted unless authorised by Volkswagen AG. Volkswagen AG does not guarantee or accept any liability with respect to the correctness of information in this document. Copyright by Volkswagen AG.

satelettronica

– Pull 4-pin connector off coolant temperature sender - G62- with coolant temperature sender - G2- -arrow-.

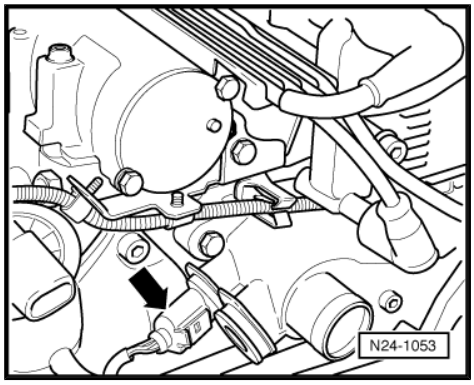

The control unit must recognise the disturbance variable and eliminate through regulation within 60 seconds.

Note

The throttle valve must not be operated during the test, otherwise the disconnected connector will be recognised as fault by the self-diagnosis and stored in the fault memory.

– Fit connector on coolant temperature sender - G62- with coolant temperature sender - G2- .

Note

When connecting the connector always ensure that it is fitted properly and engages noticeably.

- The control circuit test is also completed when the disturbance variable has been recognised only in one direction.

If actual figures deviate from specifications: Carry out repair measures and again perform exhaust emissions test!

- Reconnect all hoses and connections that have been disconnected or separated for checking and adjusting purposes.
- Operate assemblies e.g. power-assisted steering, automatic gearbox, air conditioning system and check that the engine operates smoothly under these load conditions.

5.1.12 Engine codes: AUA, AUB

Carry out “Control circuit test basic procedure” as follows:

– Activate disturbance variable within 60 seconds as follows:

Protected by copyright. Copying for private or commercial purposes, in part or in whole, is not permitted unless authorised by Volkswagen AG. Volkswagen AG does not guarantee or accept any liability with respect to the correctness of information in this document. Copyright by Volkswagen AG.
satelettronica

– Pull 4-pin connector off coolant temperature sender - G62- with coolant temperature sender - G2- -arrow-.

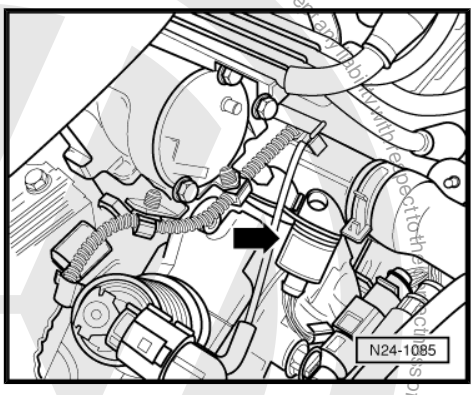

The control unit must recognise the disturbance variable and eliminate through regulation within 60 seconds.

Note

The throttle valve must not be operated during the test, otherwise the disconnected connector will be recognised as fault by the self-diagnosis and stored in the fault memory.

– Fit connector on coolant temperature sender - G62- with coolant temperature sender - G2- .

Note

When connecting the connector always ensure that it is fitted properly and engages noticeably.

- The control circuit test is also completed when the disturbance variable has been recognised only in one direction.

If actual figures deviate from specifications: Carry out repair measures and again perform exhaust emissions test!

- Reconnect all hoses and connections that have been disconnected or separated for checking and adjusting purposes.
- Operate assemblies e.g. power-assisted steering, automatic gearbox, air conditioning system and check that the engine operates smoothly under these load conditions.

5.1.13 Engine code: AUC

Carry out “Control circuit test basic procedure” as follows:

– Activate disturbance variable within 60 seconds as follows:

Protected by copyright. Copying for private or commercial purposes, in part or in whole, is not permitted unless authorised by Volkswagen AG. Volkswagen AG does not guarantee or accept any liability with respect to the correctness of information in this document. Copyright by Volkswagen AG.
satelettronica

– Pull 4-pin connector off coolant temperature sender - G62- with coolant temperature sender - G2- -arrow-.

The control unit must recognise the disturbance variable and eliminate through regulation within 60 seconds.

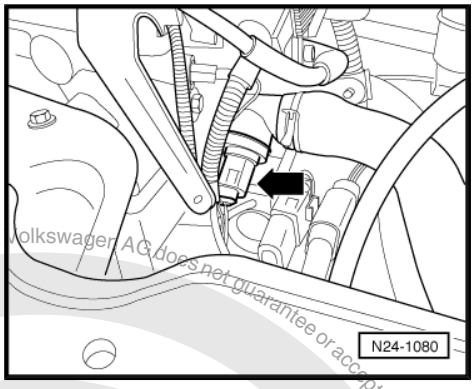

Note

The throttle valve must not be operated during the test, otherwise the disconnected connector will be recognised as fault by the self-diagnosis and stored in the fault memory.

– Fit connector on coolant temperature sender - G62- with coolant temperature sender - G2- .

Note

When connecting the connector always ensure that it is fitted properly and engages noticeably.

♦ The control circuit test is also completed when the disturbance variable has been recognised only in one direction.

If actual figures deviate from specifications: Carry out repair measures and again perform exhaust emissions test!

♦ Reconnect all hoses and connections that have been disconnected or separated for checking and adjusting purposes.

♦ Operate assemblies e.g. power-assisted steering, automatic gearbox, air conditioning system and check that the engine operates smoothly under these load conditions.

5.2 Exhaust emissions test for petrol engines with OBD

Vehicles which are fitted with or without “Onboard diagnosis” can be found in the engine list ⇒ page 1 .

Special tools and workshop equipment required

♦ Exhaust gas testing station L - VAS 7320 A-

Note

♦ *The following description refers to vehicles fitted with “On-board diagnosis” OBD.*

♦ *The OBD monitors all components and part systems influencing the exhaust emissions quality.*

♦ *It is possible to carry out an exhaust emissions test only when all units of the emissions testing station are connected properly and joined to each other according to the operating instructions.*

♦ *All work to be performed is displayed by the emissions testing station .*

Conditions for testing

- All test conditions and data required for exhaust emissions test are found on EET data sheet for the respective engine.
- For bar code reading the EET data sheet must be printed out.

Protected by copyright. Copyright by Volkswagen AG. Volkswagen AG does not guarantee or accept any liability with respect to the correctness of information in this document. Copyright by Volkswagen AG. Copying for private or commercial purposes, in part or in whole, is not permitted unless authorised by Volkswagen AG.
satelettronica

- Automatic gearbox: selector lever in position “P” or “N”.
- Manual gearbox: gear lever in neutral
- Parking brake applied
- 12V battery fully charged (if battery charge is too low, raise idling speed if necessary).

– Perform exhaust emissions test according to instructions on display.

Vehicle data input

– Enter the following data:

♦ Registration number

♦ Key numbers

♦ Vehicle identification number

♦ Fuel type

♦ Mileage

The following vehicle data can be found in the vehicle registration certificate part 1:

♦ Registration number: “e.g. WOB-HH 1234”

♦ Emission key number “Field 14.1 (code for field 14)”

♦ Vehicle manufacturer: “Field 2”, “Field 2.1 (code for field 2)”

♦ Vehicle identification number “field E”

♦ Type and version “Field D2 (type only)”, “Field 2.2 (code for field D.2)”

Specified data input for EET

There are different ways to enter the specified data:

♦ 1. By manual input

♦ 2. By bar code input from EET data sheet

♦ 3. Through ELSA web service

Note

♦ *To use the ELSA web service, the exhaust gas testing station L which is used for the exhaust emissions test must be integrated in the workshop network.*

♦ *The ELSA web service automatically transmits the data for the specific vehicle via the network to the respective mask.*

Manual specified data input for EET:

Note

All test conditions and data required for exhaust emissions test can be found in the ⇒ Data sheets for exhaust emissions test for respective engine.

– Perform manual data input according to instructions on display.

– Enter displayed values on EET data sheet in column “Test values for exhaust emissions test” on display as follows:

Protected by copyright. Copying for private or commercial purposes, in part or in whole, is not permitted unless authorised by Volkswagen AG. Volkswagen AG does not guarantee or accept any liability with respect to the correctness of information in this document. Copyright by Volkswagen AG.
satelettronica

1 - Test speed (idling speed)

2 - Warm-up phase for catalytic converter

3 - Engine temperature

4 - Increased idling speed

5 - CO content at increased idling speed

6 - Lambda at increased idling speed

7 - Idling speed

8 - Select regulating probe type; either “Step-type probe” or “Broad-band probe”.

9 - Lambda probe value

Specified data input for EET as bar code:

– If specified data for EET are available as bar code, read bar code of EET data sheet with bar code reader.

All data required are shown on display.

Inspection

– Inspect all exhaust emissions relevant components.

– Check if exhaust system is fitted and complete and check for leaks and damage.

Procedure

– Follow instructions from exhaust gas testing station .

5.2.1 Engine codes: AQQ, AVY

Carry out “Control circuit test basic procedure” as follows:

– Activate disturbance variable within 60 seconds as follows:

Protected by copyright. Copyright by Volkswagen AG. Volkswagen AG does not guarantee or accept any liability with respect to the correctness of information in this document. Copyright by Volkswagen AG. Copy, publication or transfer to other parties in whole or in part, is not permitted unless authorised by Volkswagen AG. For personal or commercial purposes only.
satelettronica

– Pull 4-pin connector off coolant temperature sender - G62- with coolant temperature sender - G2- -arrow-.

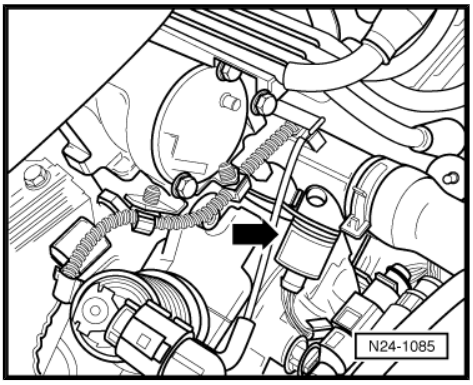

The control unit must recognise the disturbance variable and eliminate through regulation within 60 seconds.

Note

The throttle valve must not be operated during the test, otherwise the disconnected connector will be recognised as fault by the self-diagnosis and stored in the fault memory.

– Fit connector on coolant temperature sender - G62- with coolant temperature sender - G2- .

Note

When connecting the connector always ensure that it is fitted properly and engages noticeably.

If actual figures deviate from specifications: Repair measures and again perform exhaust emissions test!

After completing exhaust emissions test note the following:

- Reconnect all hoses and connections that have been disconnected or separated for checking and adjusting purposes.
- Operate assemblies e.g. power-assisted steering, automatic gearbox, air conditioning system and check that the engine operates smoothly under these load conditions.

5.3 Exhaust emissions test for diesel engines without OBD

Exhaust emissions test for diesel engines without OBD with emissions testing station VAS 6300 ⇒ page 144

5.3.1 Exhaust emissions test for diesel engines without OBD with diesel tester V.A.G 1743

Special tools and workshop equipment required

- Diesel tester - V.A.G 1743-

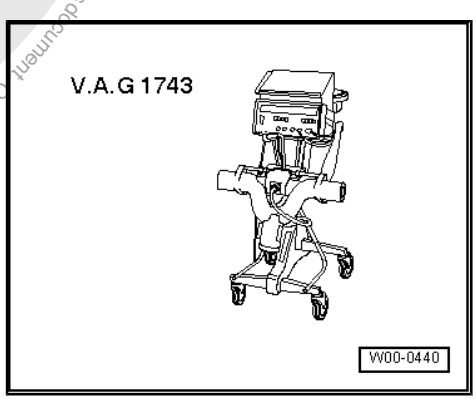

Protected by copyright. Copying for private or commercial purposes, in part or in whole, is not permitted unless authorised by Volkswagen AG. Volkswagen AG does not guarantee or accept any liability with respect to the correctness of information in this document. Copyright by Volkswagen AG.
satelettronica

Protected by copyright. Copyright by Volkswagen AG. Volkswagen AG does not guarantee or accept any liability with respect to the correctness of information in this document. Copyright by Volkswagen AG. Reproduction, in whole or in part, is not permitted unless authorised by Volkswagen AG. Volkswagen AG does not guarantee or accept any liability with respect to the correctness of information in this document. Copyright by Volkswagen AG. Protected by copyright. Copying for private or commercial purposes, in part or in whole, is not permitted unless authorised by Volkswagen AG.

- Engine speed adapter - VAS 5087-

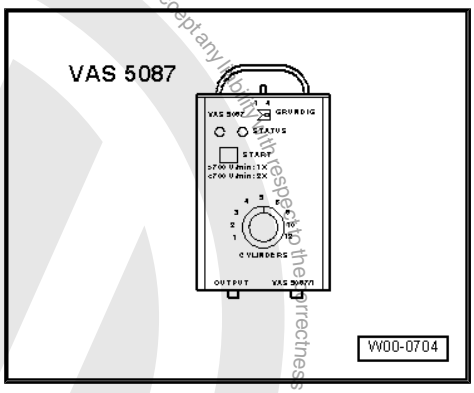

- Adapter cable - VAS 5087/3-

Note

- *All test conditions and data required for emissions test ⇒ Data sheets for exhaust emissions test*
- *If possible, the test should be completed outdoors following a road test. If this is not possible for various reasons (weather, excessive noise in residential areas), then the test can be carried out in a workshop.*
- *To reduce noise levels, the bonnet should be closed on first catch during tests.*

Carrying out visual check of components influencing emissions:

⇒ Data sheets for exhaust emissions test, ⇒ Data sheets for exhaust emissions test

– Performing visual check for:

- Installation
- Completeness
- Leakage
- Damage

Note

Faults found are to be rectified.

With ignition switched off, connect testers as follows:

– Apply handbrake.

– Manual gearbox: gear lever in neutral.

satelettronica

Copyright by Volkswagen AG. Volkswagen AG does not guarantee or accept any liability with respect to the correctness of information in this document. Copyright by Volkswagen AG. Protected by copyright. Copying for private or commercial purposes, in part or in whole, is not permitted unless authorised by Volkswagen AG.

– Automatic gearbox: selector lever in position “P” or “N”.

– Connect diesel tester - V.A.G 1743- according to operating instructions with ignition switched off.

Connect engine speed adapter - VAS 5087- as follows:

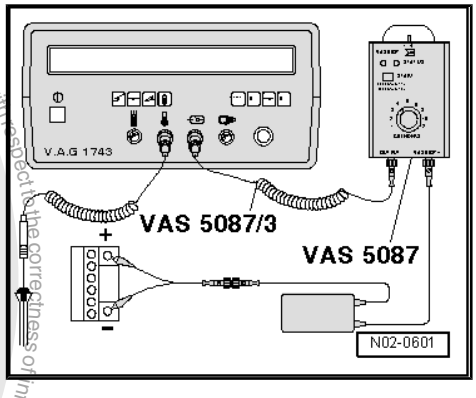

Note

♦ *Observe ⇒ operating instructions for engine speed adapter - VAS 5087- !*

♦ *Strictly follow the safety precautions in the operating instructions!*

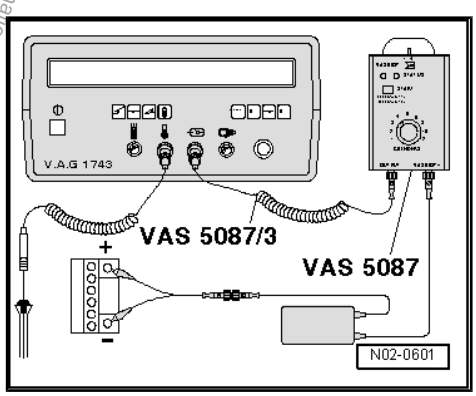

– Using adapter cable - VAS 5087/3- , connect “Output” of engine speed adapter - VAS 5087- to pick-up clamp input of diesel tester - V.A.G 1743- .

– Turn switch for number of cylinders to respective number of cylinders.

– Connect a wire from adapter - VAS 5087/1- to -VAS 5087- (socket -VAS 5087/1-).

– Using the other wires from adapter - VAS 5087/1- make a connection to the vehicle battery, by connecting:

♦ Red clamp to positive

♦ Black clamp to negative

– Start engine and run it at idling speed.

– Press the `Start` button on engine speed adapter - VAS 5087- . The red signal lamp must flash for about 10 seconds. Then the green signal lamp must light up.

The engine speed must now be displayed on diesel tester - V.A.G 1743- .

If the engine speed is displayed incorrectly or not at all: ⇒ Operating instructions for VAS 5087 .

Perform exhaust emissions test according to instructions on diesel tester - V.A.G 1743- display.

If this message appears on the display:

```
Please insert vehicle identity card!!
Manual input with -> button
```

satelettronica

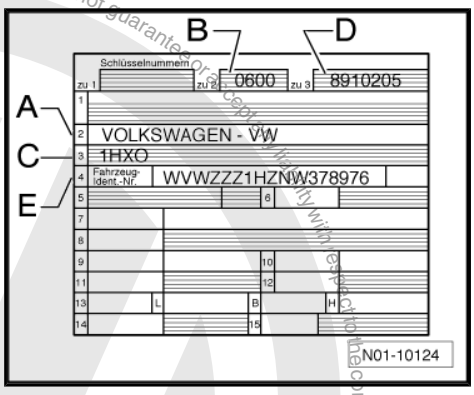

– Enter vehicle identification data from vehicle identification documents using keyboard as follows (press <-' button after each entry):

- ♦ Registration number
- ♦ Vehicle manufacturer -A-
- ♦ Key number -B-
- ♦ Vehicle type -C-
- ♦ Key number -D- (the first 3 digits)
- ♦ For vehicle identification number (chassis number) -E-
- ♦ Engine code

– Enter odometer reading using keyboard.

– Confirm entry of vehicle identification data by pressing Q button.

```
Check input with -> button
Continue with Q button
```

If this message appears on the display:

```
Read bar code
Manual input with the -> button
```

– Enter specifications with bar code reader of data reader, to do this slide bar code reader over respective bar code of data sheet in ⇒ Data sheets for exhaust emissions test binder.

or

– Carry out entry by hand following instructions on data reader display using → button.

– If this message appears on the display:

```
Check input with -> button
Continue with Q button
```

– Confirm vehicle data entered or read using Q button.

If this message appears on the display:

```
Visual check OK = y not OK = n
```

– Enter result of visual check.

If this message appears on the display:

```
F1 Temperature measurement with sensor
F2 Enter temp. measurement manually
```

– Press F1 button for “Temperature measurement with sensor”.

– If engine oil temperature has reached 80°C, pull out measuring sensor and push dipstick in until stop.

– Continue test sequence by pressing the Q button.

Checking idling speed:

If this message appears on the display:

```
Idling speed ->
Speed  ACT. xxxx rpm SPEC. xxxx rpm
```

– Press → button.

Idling speed not within specified range:

Protected by copyright. Copying for private or commercial purposes, in part or in whole, is not permitted unless authorised by Volkswagen AG. Volkswagen AG does not guarantee or accept any liability with respect to the correctness of information in this document. Copyright by Volkswagen AG.
satelettronica

Adjusting idling speed, engine code AEF:

– Adjust idling speed by turning the idling speed adjustment screw -1-.

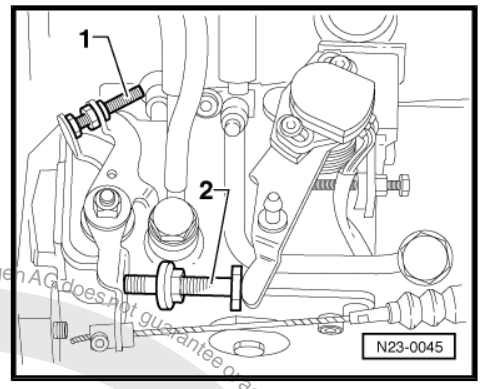

Note

The bolt -2- must on no account be turned!

Adjusting idling speed, engine codes AGD, AHG, AKU,AMF, ASX:

Note

The idling speed and maximum speed can be checked but not adjusted.

– If the values are not within specified range, a repair must be made.

Continued for all vehicles:

Checking rev limit:

– Continue test sequence by pressing the Q button.

If this message appears on the display:

```
Rev limit 5 sec
Speed ACT. xxxx rpm SPEC. xxxx..xxxx rpm
```

– Depress accelerator pedal fully and hold for specified time.

WARNING

If the rev limit is exceeded, lift off accelerator pedal immediately and adjust rev limit to specification or perform repair measures.

If this message appears on the display:

```
Rev limit ->
Speed ACT. xxxx rpm SPEC. xxxx..xxxx rpm
```

– Release accelerator pedal.

– Check actual figures, to do this switch further the actual display using → button.

Rev limit not within specified range:

Adjusting rev limit: engine code AEF

– Remove locking wire and plastic protective cap.

Protected by copyright. Copying for private or commercial purposes, in part or in whole, is not permitted unless authorised by Volkswagen AG. Volkswagen AG does not guarantee or accept any liability with respect to the correctness of information in this document. Copyright by Volkswagen AG.
satelettronica

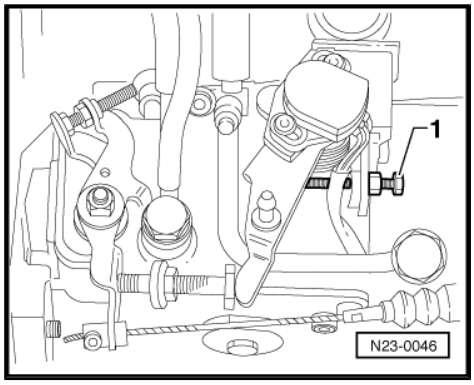

– Open the throttle and adjust speed by turning the adjustment screw -1-.
– Lock adjustment screw.
– Fit plastic protective cap and secure with locking wire.

Adjusting rev limit: engine codes AGD, AHG, AKU,AMF, ASX

– If the values are not within specified range, a repair measure must be made.

Continued for all vehicles:

– Continue test sequence by pressing the Q button.

If this message appears on the display:

```
Idling speed 1st measurement 15 sec
Speed ACT. xxxx rpm SPEC. xxx...xxxx rpm
```

The data reader accepts the actual figures within 15 seconds.

If this message appears on the display:

```
Data transfer to diesel tester
 Depress accelerator quickly
```

– Depress accelerator pedal fully and hold.

Indicated on display:

```
Data transfer to diesel tester
 Neutral accel. running
```

– Continue to depress and hold accelerator pedal.

If this message appears on the display:

```
Idling speed 2nd measurement 15 sec
Speed ACT. xxxx rpm SPEC. xxx...xxxx rpm
```

– Release accelerator pedal.

The data reader accepts the actual figures within 15 seconds.

If this message appears on the display:

```
Data transfer to diesel tester
 Depress accelerator quickly
```

– Depress accelerator pedal fully and hold.

Indicated on display:

```
Data transfer to diesel tester
 Neutral accel. running
```

– Continue to depress and hold accelerator pedal.

If this message appears on the display:

```
Idling speed 3rd measurement 15 sec
Speed ACT. xxxx rpm SPEC. xxx...xxxx rpm
```

– Release accelerator pedal.

The data reader accepts the actual figures within 15 seconds.

If this message appears on the display:

```
Data transfer to diesel tester
 Depress accelerator quickly
```

– Depress accelerator pedal fully and hold.

Protected by copyright. Copying for private or commercial purposes, in part or in whole, is not permitted unless authorised by Volkswagen AG. Volkswagen AG does not guarantee or accept any liability with respect to the correctness of information in this document. Copyright by Volkswagen AG.
satelettronica

Indicated on display:

```
Data transfer to diesel tester
 Neutral accel. running
```

– Continue to depress and hold accelerator pedal.

If this message appears on the display:

```
Idling speed 4th measurement 15 sec
Speed ACT. xxxx rpm SPEC. xxx...xxxx rpm
```

– Release accelerator pedal.

The data reader accepts the actual figures within 15 seconds.

If this message appears on the display:

```
Data transfer to diesel tester
 Depress accelerator quickly
```

– Depress accelerator pedal fully and hold.

Indicated on display:

```
Data transfer to diesel tester
 Neutral accel. running
```

– Continue to depress and hold accelerator pedal.

If this message appears on the display:

```
Highest opacity figure ->
ACT. x.xx rpm SPEC. x...x.xx rpm
```

– Release accelerator pedal.

– Press ↵ button.

If this message appears on the display:

```
Average opacity figure ->
ACT. x.xx rpm SPEC. x...x.xx rpm
```

– Press ↵ button.

If this message appears on the display:

```
Opacity band width ->
ACT. x.xx rpm SPEC. x...x.xx rpm
```

– Press ↵ button.

If this message appears on the display:

```
Test OK Continue with Q button
Repeat test with F1 button
```

– Press Q button.

If the following is indicated on display: Press F1 button and repeat test or carry out repair measures.

```
Test not OK Continue with Q button
Repeat test with F1 button
```

If this message appears on the display:

```
Enter remarks with -> button
Continue with Q button
```

– Enter remarks if necessary after pressing the ↵ button.

– Press Q button.

Volkswagen AG does not guarantee or accept any liability with respect to the correctness of information in this document. Copyright by Volkswagen AG.
Protected by copyright. Copying for private or commercial purposes, in part or in whole, is not permitted unless authorised by Volkswagen AG.
satelettronica

Protected by copyright. Copyright by Volkswagen AG. Volkswagen AG does not guarantee or accept any liability with respect to the correctness of information in this document. Copyright by Volkswagen AG. Reproduction, in whole or in part, is not permitted unless authorised by Volkswagen AG. Commercial use of the information is not permitted.

If this message appears on the display:

```
Select tester / manual input F3
F1 XXXXX F2 XXXXX
```

– Select tester or enter name using F1 to F3 buttons.

– Press Q button, wait for log print-out.

– Press → button.

– End test by pressing the F2 button.

5.3.2 Exhaust emissions test for diesel engines without OBD with emissions testing station VAS 6300

Caution

- *Observe "SAFETY AND DAMAGE AVOIDANCE PRECAUTIONS" in the operating instructions for VAS 6300.*

Note

The following description refers to vehicles not fitted with "On-board diagnosis", OBD.

Special tools and workshop equipment required

- Emissions testing station - VAS 6300-

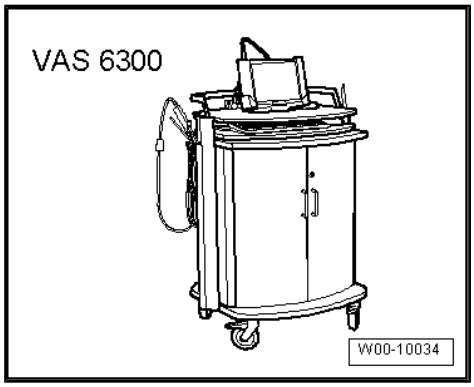

- OBD adapter cable - VAS 5052/16-

Note

- *It is only possible to carry out an exhaust emissions test when all units of the emissions testing station - VAS 6300- are connected properly and combined with each other according to the operating instructions.*
- *All work to be performed is displayed by the emissions testing station - VAS 6300- .*

Prerequisites for testing:

- All test conditions and data required for exhaust emissions test are found on EET data sheet for the respective engine.
- For bar code reading of specified data for EET, the EET data sheet must be printed out.

satelettronica

- Automatic gearbox: selector lever in position “P” or “N”.
- Manual gearbox: gear lever in neutral
- Parking brake applied

– Perform exhaust emissions test according to instructions on display.

Initial screen:

– Select button “Exhaust emissions test” -arrow-.

An overview is displayed to select the respective EET type.

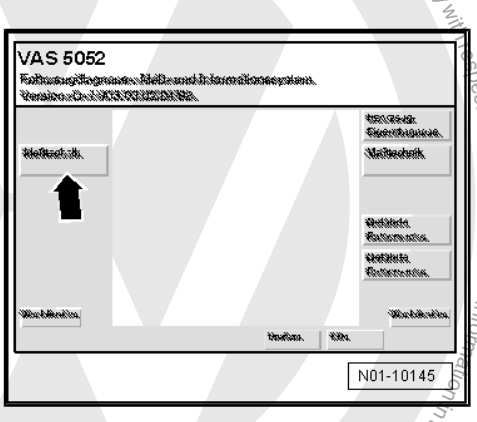

– Select “EET diesel” -arrow-.

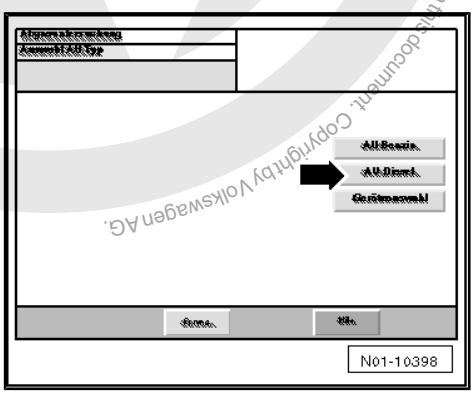

The display for warm-up phase appears.

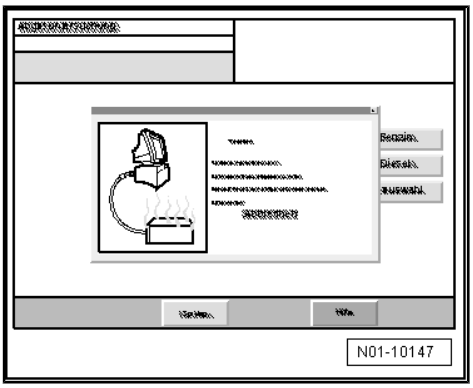

Protected by copyright. Copying for private or commercial purposes, in part or in whole is not permitted unless authorised by Volkswagen AG. Volkswagen AG does not guarantee or accept any liability with respect to the correctness of information in this document. Copyright by Volkswagen AG.
satelettronica

– Continue exhaust emissions test according to instructions on display.

– If the EET specification selection is displayed, select respective “EET specification selection” -arrow-.

♦ When exhaust emissions test is performed for the first time, either select “Standard values”,

♦ Or “Last vehicle” when an exhaust emissions test is to be carried out again.

– Select “Continue” -item 1- on display.

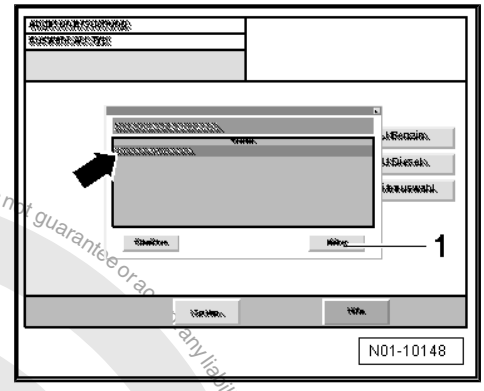

Vehicle data input:

The vehicle data input menu is displayed.

Note

♦ *For new models the document previously known as the vehicle registration document is now called the vehicle registration certificate part 1.*

♦ *For new models the document previously known as the vehicle log book is now called the vehicle registration certificate part 2.*

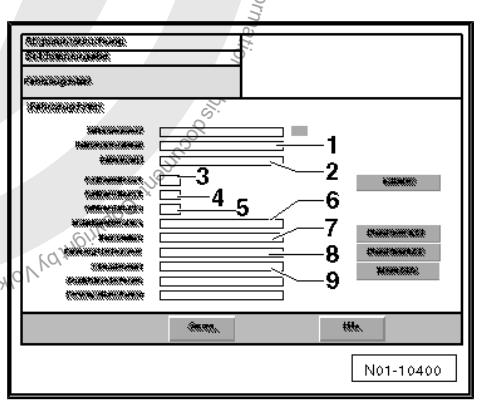

♦ -1- Vehicle manufacturer: “e.g. VOLKSWAGEN - VW”

♦ -2- Vehicle type: “e.g. Golf”

♦ -3- Key number to 1: “e.g. 11”

♦ -4- Key number to 2: “e.g. 0603” (vehicle registration document)

♦ -4- Key number to 2.1 (code to 2): “e.g. 0603” (vehicle registration certificate part 1)

♦ -5- Key number to 3: “e.g. 358” (vehicle registration document)

♦ -5- Key number for 2.2 (code to D2): “e.g. 358” (vehicle registration certificate part 1)

♦ -6- Engine code “e.g. AQY”

♦ -7- Registration number: “e.g. WOB-HH 1234”

♦ -8- Vehicle identification number: “e.g. WVWZZZ1JZYW123456”

– Enter odometer reading at -item 9- “e.g. 32000”.

Note

♦ *Further functions can be called up using* GoTo *button.*

♦ *The test can be interrupted using* GoTo *button.*

Protected by copyright. Copying for private or commercial purposes, in whole or in part, is not permitted unless authorised by Volkswagen AG. Volkswagen AG does not guarantee or accept any liability with respect to the correctness of information in this document. Copyright by Volkswagen AG.

satelettronica

– Select “diesel below 3.5t” or “diesel above 3.5t” -arrow-.

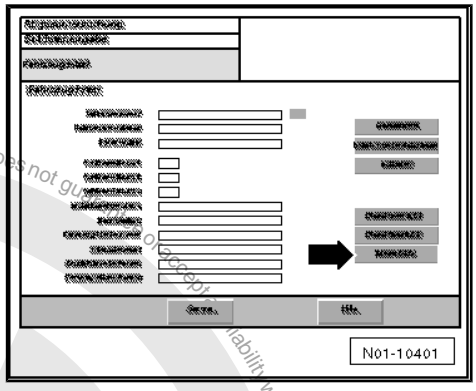

Specified data input for EET:

There are different ways to enter the specified data:

- 1. By manual input
- 2. By bar code input from EET data sheet
- 3. Through ELSA web service

Note

- *To use the ELSA web service, the diagnostic tester which is used for the exhaust emissions test, must be integrated in the workshop network.*
- *For the ELSA web service the vehicle specified data are automatically transmitted via the network to the respective mask.*

Manual specified data input for EET:

Note

All test conditions and data required for exhaust emissions test ⇒ Data sheets for exhaust emissions test for respective engine.

– Perform manual data input according to instructions on display.

– Enter displayed values on EET data sheet in column “Test values for exhaust emissions test” on display as follows:

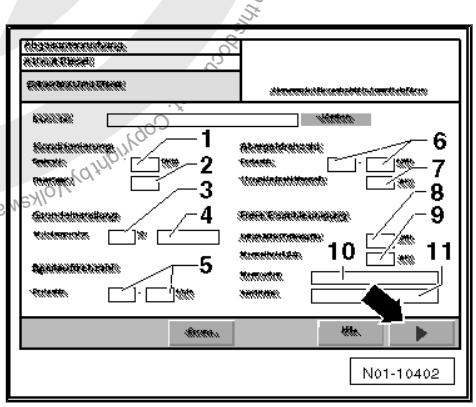

1 - Speed for conditioning

2 - Number of throttle bursts for conditioning

3 - Engine oil temperature (min. value)

4 - Select engine oil temperature measurement procedure

5 - Idling speed

6 - Governed speed

7 - Rev limit measuring period (1 second)

8 - Opacity figure (average)

9 - Select probe type (No. of probe)

10 - Select measuring mode

11 - Measured period portion

– When all data have been entered properly, press ⏎ button -arrow-.

Specified data input for EET as bar code:

– If specified data for EET are available as bar code, read bar code of EET data sheet with bar code reader.

Protected by copyright. Copyright by Volkswagen AG. Volkswagen AG does not guarantee or accept any liability with respect to the correctness of information in this document. Copyright by Volkswagen AG.
satelettronica

All required data is shown on display -1-.

– Press button -arrow- to continue procedure.

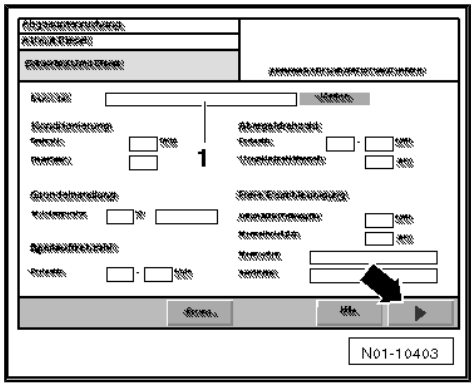

Visual inspection:

– Follow instructions on display.

– Perform visual check.

– If visual check is OK, press “OK” button -arrow-.

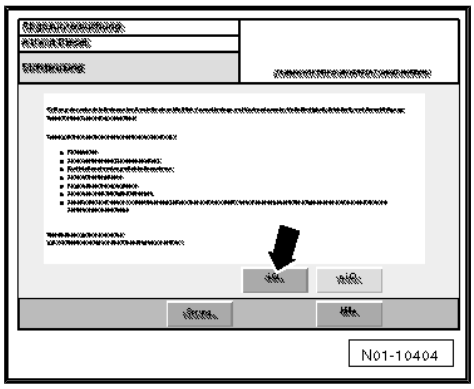

Note

Pressing "not OK" button causes a check to be carried out.

Connecting diagnostic connector:

- Ignition is switched off.

The visual check is displayed with the request to connect the diagnostic connector -arrow A-

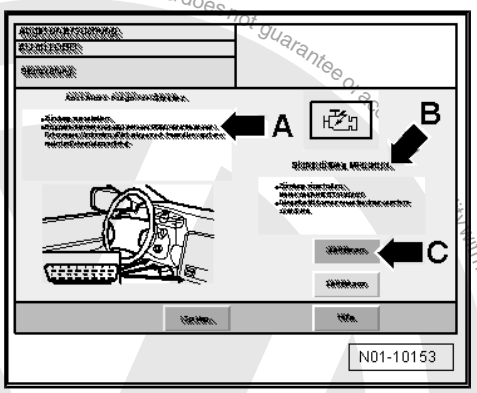

– Follow instructions on display -arrow A- and -arrow B-.

– Connect diagnostic cable connector to EOBD connection ⇒ page 20 .

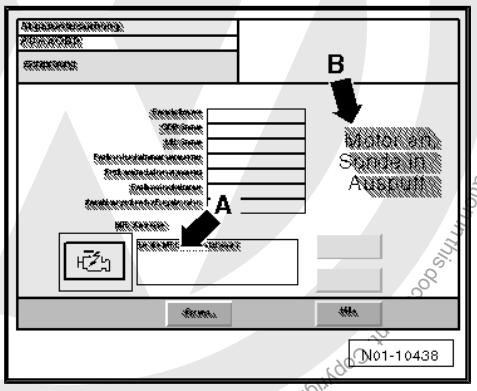

Conditioning:

– Start engine.

In the conditioning phase the engine and, if necessary, the emission control systems are brought to operating temperature by throttle bursts and are prepared for the exhaust emissions test.

Protected by copyright. Copying for commercial purposes, in part or in whole, is not permitted unless authorised by Volkswagen AG. Volkswagen AG does not guarantee or assume any liability with respect to the correctness of information in this document. Copyright by Volkswagen AG.
satelettronica

– Follow instructions on display.

– Maintain engine speed in required engine speed range.

If no conditioning is necessary, press → button -arrow- for the next measurement.

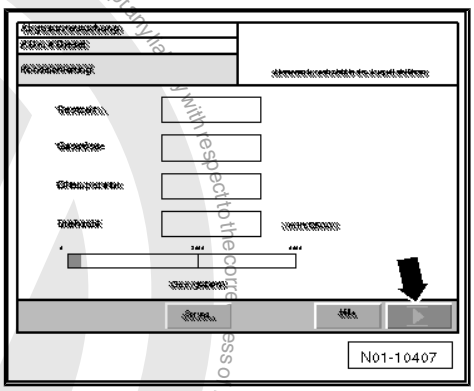

Measuring engine temperature:

It is automatically switched to display for measuring engine temperature.

– Follow instructions on display.

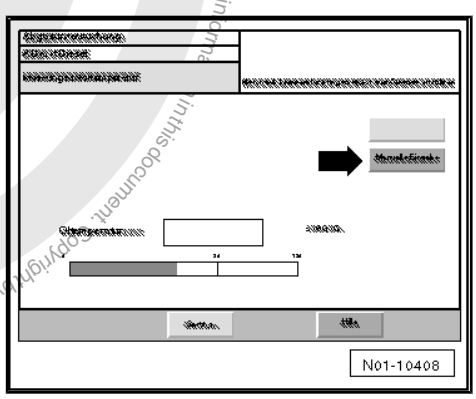

Note

- *This is only indicated on display if engine temperature has not reached 80°C.*
- *Do not insert emission probe into exhaust tail pipe.*
- *Using button "Alternative input" -arrow- other measured value inputs can be selected to measure the engine temperature. The measured value must then be entered by hand. At end of exhaust emissions test the measured value is marked by # in the evaluating mask and in the log print-out.*
- *The button "Alternative input" is only active, if previously a different method has been selected at specified data input for EET for "Engine oil measurement".*

Caution

Measuring the engine temperature is normally carried out via the oil temperature probe. The engine temperature must not be determined with engine running, otherwise the engine and probe could be damaged!

– Bring engine to required temperature.

Measuring idling speed:

It is automatically switched to display for measuring the idling speed.

Protected by copyright. Copying for private or commercial purposes, in part or in whole, is not permitted unless authorised by Volkswagen AG. Volkswagen AG does not guarantee or accept any liability with respect to the correctness of information in this document. Copyright by Volkswagen AG.
satelettronica

– Follow instructions on display.

Measurement starts when the engine speed has reached the required level.

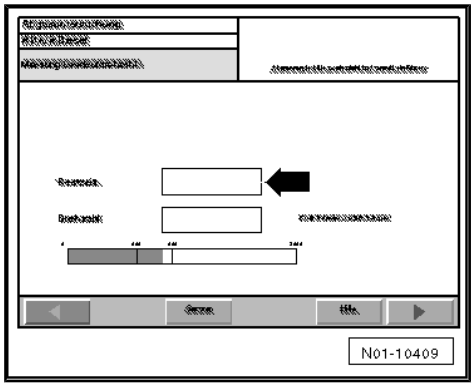

Note

- *Do not insert emission probe into exhaust tail pipe.*
- *The measurement can be skipped by pressing the ⏎ button, i.e. the exhaust emissions test has failed.*
- *Measured values are reset using ← button, and the test can be repeated.*

– Maintain engine speed in required engine speed range.

The remaining time to perform measurement is displayed -arrow-.

Measuring rev limit:

It is automatically switched to display for measuring rev limit.

Measurement starts when the engine speed has reached the required level.

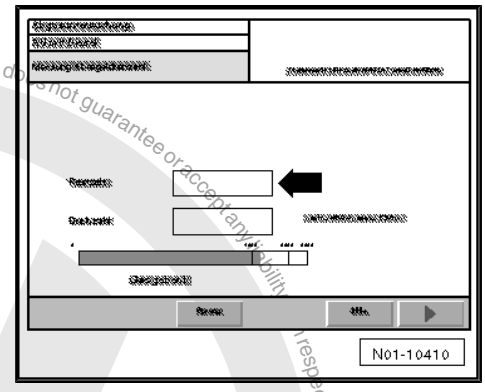

– Operate throttle until the measurement is carried out. To do this, immediately depress accelerator pedal.

The remaining time to perform measurement is displayed -arrow-.

Note

- *Do not insert emission probe into exhaust tail pipe.*
- *The measurement can be skipped by pressing the ⏎ button, i.e. the exhaust emissions test has failed.*

Air quality check:

An air quality check is carried out before starting the free acceleration. When doing this, no emission probe must be in the exhaust tail pipe. Otherwise measuring errors or faulty signals could occur during further measurements.

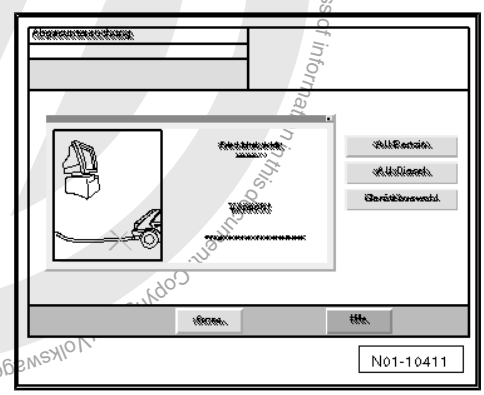

– When the air quality check is carried out, insert emission probe into exhaust tail pipe

Free acceleration:

It is automatically switched to display for “Free acceleration”.

During “Free acceleration” the engine is revved up to rev limit without load as quickly as possible.

The “Free acceleration” test consists of at least four throttle bursts.

Free acceleration - phase 1:

satelettronica

– Follow instructions on display -arrow A- and -arrow C-.

– Maintain idling speed in engine speed range indicated -arrow D-.

The remaining time to perform measurement is displayed -arrow B-.

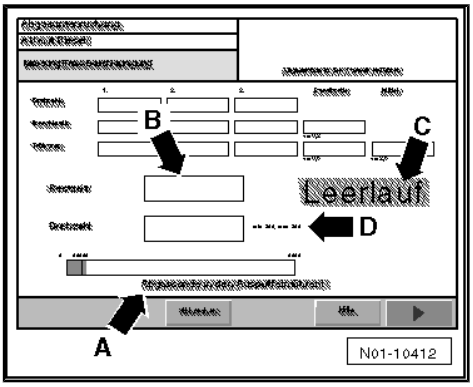

Note

- *The emissions probe must be in the exhaust tail pipe.*
- *If the speed deviates from engine speed range indicated, the measurement starts again.*
- *The measurement can be skipped by pressing the button, i.e. the exhaust emissions test has failed.*

Free acceleration - phase 2:

– Follow instructions on display -arrow B-.

– Depress accelerator pedal fully when prompted and hold until the prompt for idling is shown on display.

Free acceleration - phase 3:

– Remove foot from accelerator pedal as soon as the prompt for idling is shown on display -arrow B- and run engine at idling speed.

The test results and information on the latest "Free acceleration" are shown on display -arrow A-. If the measured values are not OK, here you can obtain information why the "Free acceleration" has failed.

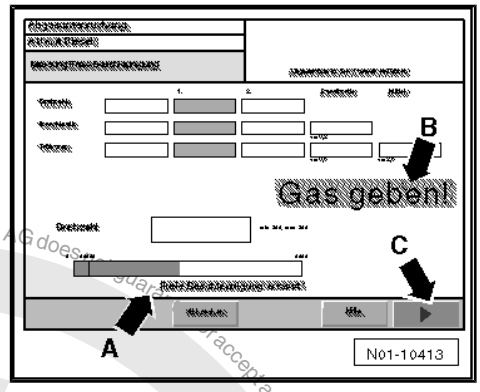

Note

- *If the field is coloured white the measured value is within tolerance.*
- *If the field is coloured red the measured value is outside tolerance.*
- *If the field is coloured yellow the measured value is outside tolerance, but can be assessed by the operator.*

Further throttle bursts:

– Follow instructions on display -arrow B-.

Now the next throttle burst follows, starting with phase 1 of "Free acceleration".

Many "Free accelerations" can be carried out until:

- Three "Free accelerations" have been completed in succession and the range of acceleration is OK.
- All values are OK, with the exception of range of acceleration, and the test is continued by pressing the button -arrow C-. (In this case, the operator assesses if the value is OK).
- The values are not OK and the measurement is terminated/ skipped by pressing the button -arrow C-.

If the measured values are OK after three throttle bursts in succession, i.e. all fields are coloured white, the exhaust emissions test is completed.

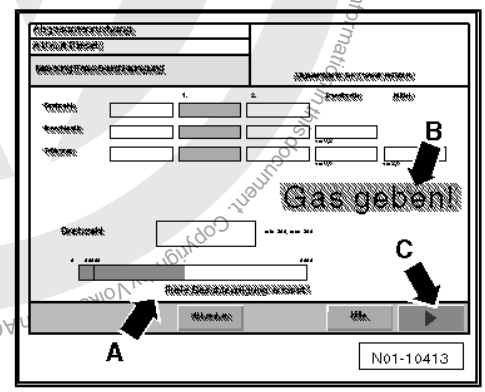

satelettronica

Protected by copyright. Copying for private or commercial purposes, in part or in whole, is not permitted unless authorised by Volkswagen AG. Volkswagen AG does not guarantee or accept any liability with respect to the correctness of information in this document. Copyright by Volkswagen AG.

Evaluation:

When the exhaust emissions test has been performed, the log is shown on display.

The test result is displayed.

Now remarks concerning the exhaust emissions test can be entered -arrow A-. They will then be included in the test log.

– When the exhaust emissions test is classed as passed, select -arrow B- “EET sticker issued” in drop-down menu and date.

– Then confirm with “Yes” -arrow C-.

The exhaust emissions test log is shown on display and can be printed out as often as required in the menu “Print preview” using “Print” button -arrow A-.

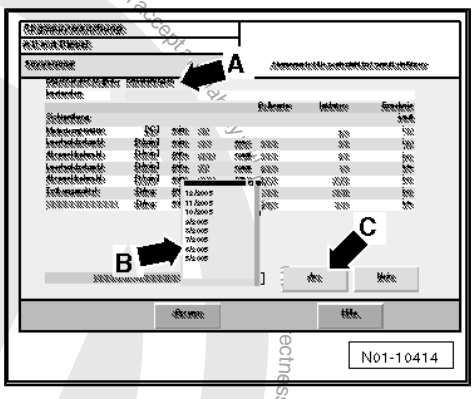

– Press button “Close” -arrow B- to close the menu “Print preview ”.

– Follow instructions on display.

– Take emission probe out of exhaust tail pipe.

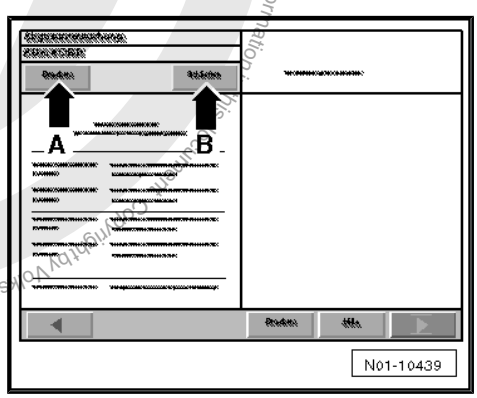

– Then press ⏎ button -arrow B-

The exhaust emissions test is completed, a new exhaust emissions test can be performed.

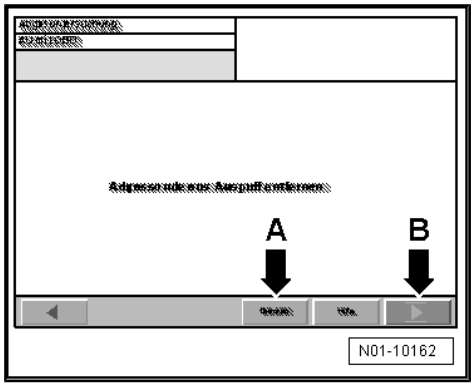

satelettronica

6 Glossary

These explanations only apply to “Maintenance Manual”. They are not necessarily generally valid!

Term	Explanation
ABS	(Anti-lock brake system); the ABS is a regulating system in the brake system, that prevents locking when braking. This helps to maintain directional stability and steerability.
ATF	(Automatic transmission fluid); gear oil for automatic gearboxes
ATF level	Filling level of ATF in gearbox
CO	(Carbon monoxide); is produced when fuels containing carbon are not combusted completely
CN	(Cetane number); measurement unit for ignition quality of diesel fuel
DIN	Deutsches Institut für Normung e.V (German Institute for Standardization)
Part no.	Abbreviation for part number
EN	European standard

Term	Explanation
EOBD	European Onboard Diagnosis
FAME	Fatty acid methyl ester
FSI	Fuel stratified injection
TFSI	Turbo fuel stratified injection
MIL	(Malfunction indicator light); American designation for exhaust emissions warning lamp K83
OBD	Onboard diagnosis, the OBD monitors all components influencing the exhaust emissions quality.
OBD-II	American Onboard Diagnosis
Unit injector	Unit injector for diesel engines
PR-No.	Abbreviation for production control number. Identifies among other things optional equipment and country-specific deviations
PM	(Particulate matter); soot particulate value for diesel engine emissions
QG0	Vehicles are “not” factory-fitted with components for LongLife service. For maintenance, the intervals based on time and distance (non-flexible intervals) apply.

Term	Explanation
QG1	Vehicles are factory-fitted with active LongLife service. This means, vehicles have a flexible service interval display and are fitted with the following components: ♦ Flexible service interval display in combi-instrument ♦ Engine oil level sensor ♦ Brake lining wear indicator
QG2	The LongLife service is not factory-activated. This means, vehicles have a non-flexible service interval display (time and distance dependent service intervals) and are fitted with the following components: ♦ Non-flexible service interval display in dash panel insert ♦ Engine oil level sensor ♦ Brake lining wear indicator
Readiness code	8-digit binary code which indicates if all exhaust relevant diagnoses have been performed by the engine management.

Copyright: Copyright by Volkswagen AG. Protected by copyright. Copying for private or commercial purposes, in part or in whole, is not permitted unless authorised by Volkswagen AG. Volkswagen AG does not guarantee or accept any liability with respect to the correctness of information in this document.
satelettronica

Term	Explanation
RON	(Research octane number); measurement unit of the knock resistance of petrol
SAE	(Society of Automotive Engineers); society which creates proposals/guidelines for implementing legal requirements (e.g. standards).
SD	Naturally aspirated diesel engine
SDI	Naturally aspirated diesel direct injection engine
TDI	Turbodiesel direct injection
DP	Distributor injection pump
ULEV	Ultra low emission vehicle

Term	Explanation
ESI	Extended service interval
Common rail	Refers to a common high-pressure injection line (rail), which supplies all cylinders of the relevant cylinder bank with fuel.
DPF	Diesel particulate filter, the particulate filter is installed behind the catalytic converter and filters soot particles of emissions.
LongLife service	The LongLife service enables extremely long inspection or oil change intervals, depending on individual driving style and conditions under which the vehicle is used. For the LongLife service a special engine oil is required.
Step-type probe	Also called finger probe (LPH lambda probe heating), (FLP flat lambda probe) or planar lambda probe. The voltage of the output signal of the lambda probe jumps rapidly. The lambda probe value is determined by a change in voltage. The probe is used as after catalytic converter probe.
Broad-band probe	Also called (ULP probe) universal lambda probe. The voltage of the output of the lambda probe nearly increases linear. The lambda probe value is determined by a change in voltage. This enables to measure the lambda probe value via a larger measuring range (broad band). The probe is used as before catalytic converter probe.
TPMS, TPLI	Tyre pressure monitoring, tyre monitor display
RoW	“Rest of world”

Copyright by Volkswagen AG. Volkswagen AG does not guarantee or accept any liability with respect to the correctness of information in this document. Copyright by Volkswagen AG. Reproduction, in part or in whole, is only permitted with our express authorisation. Use for other purposes, in particular for commercial purposes, is not permitted unless authorised by Volkswagen AG.
satelettronica